CALIBRATION LAB

ASDE 4

MODEL ASDE-40

LING Electronics

A DIVISION OF LTV LING ALTEC, Inc.

INSTRUCTION MANUAL

MP MASTER

MA34240

MODEL

ASDE-40
AUTOMATIC SPECTRAL DENSITY ANALYZER/EQUALIZER

IN ALL CORRESPONDENCE WITH THE FACTORY BE SURE TO INCLUDE THE FOLLOWING INFORMATION:

EQUIPMENT MODEL NUMBER

~~SERIAL NO.~~ ASDE-40

~~LING NO.~~ #741

S/D ASSET #3694

LING Electronics

A DIVISION OF LTV LING ALTEC, Inc.
1515 S. MANCHESTER AVENUE, ANAHEIM, CALIFORNIA 92803 (714)774-2000

ASDE-40-15-8

TABLE OF CONTENTS

SECTION 1 - DESCRIPTION AND CHARACTERISTICS

Paragraph		Page
1-1	General.	1-1
1-2	Purpose	1-2
1-3	Specifications	1-2

SECTION 2 - OPERATION

2-1	Installation.	2-1
2-2	Operating Procedures	2-10

SECTION 3 - PRINCIPLES OF OPERATION

3-1	General.	3-1
3-2	ASDE-40 Automatic Spectral Density Equalizer/Analyzer	3-3
3-3	Model AMD-10 Meter Amplifier Circuit Description.	3-6
3-4	Magnetic Amplifier Assembly Circuit Description	3-7
3-5	Light Dependent Resistor (LDR) Assembly Circuit Description	3-9
3-6	Model PA-1 Preamplifier Circuit Description	3-11
3-7	Model PA-2 Preamplifier Circuit Description	3-12
3-8	Model LA-3 Amplifier Circuit Description	3-12
3-9	Model MR-40-1 Meter Range Switch Circuit Description.	3-12
3-10	Model CM-40A Mode Selector Switch and Model SE-40 Equalizer Assembly Circuit Description.	3-13
3-11	Model APS-10A Power Supply Assembly Circuit Description	3-14
3-12	Model GRN-200A Dual Noise Generator Circuit Description.	3-14
3-13	Relay Assembly Circuit Description	3-16
3-14	Model A-10 Driver Amplifier Circuit Description	3-16
3-15	Model SSM-50A Scanner Circuit Description	3-17

SECTION 4 - TEST AND CALIBRATION

4-1	General.	4-1
4-2	Preliminary System Tests and Adjustments	4-1
4-3	Analyzer Calibration.	4-5
4-4	Equalizer Calibration	4-12
4-5	Magnetic Amplifier Assembly Gain Calibration.	4-14
4-6	Dynamic Range Indicator Calibration	4-16
4-7	Threshold Calibration	4-18
4-8	Chassis Calibration Procedures.	4-19
4-9	Troubleshooting	4-29
4-10	Cleaning	4-35
4-11	Lubrication.	4-35
4-12	Other Difficulty	4-37
4-13	Engineering Drawings	4-37

LIST OF ILLUSTRATIONS

SECTION 2

Figure		Page
2-1	Model ASDE-40, Outline Drawing.	2-1
2-2A	Location of Major Parts.	2-2
2-2B	Location of Major Parts	2-2

2-3 Model PD-10B Power Distribution Panel 2-3
2-4 Model MR-40-1 Meter Range Selector 2-4
2-5 Model SA-40B, Meter Assembly 2-4
2-6 Model SE-40, Equalizer Assembly 2-5
2-7 Model CM-40A, Mode Selector 2-5
2-8 Model CP-10A, Control Panel. 2-6
2-9 Model 5LF-40A, Low Frequency Equalizer. 2-7
2-10 Model GRN-200A, Dual Noise Generator 2-8
2-11 Model APS-10A, Power Supply Assembly. 2-8
2-12 Model SSM-50A, Scanner 2-9
2-13 Access Panel. 2-10
2-14 Model ASDE-40, Two Level Test Specification. 2-11
2-15 Model ASDE-40, Spectrum with Roll-off Plotted with Logarithmic Scales on Both Axes 2-14
2-16 Model ASDE-40, Roll-off Portion of Spectrum Plotted with Linear Scales on Both Axes 2-14
2-17 Model ASDE-40, Spectrum with Rising Characteristic Plotted with Logarithmic Scales on Both Axes 2-15
2-18 Model ASDE-40, Rising Portion of Spectrum Plotted with Linear Scales on Both Axes 2-15

SECTION 3

3-1 Model ASDE-40, Acceleration Spectral Density Curve. 3-2
3-2 Magnetic Amplifier Assembly, Simplified Schematic. 3-9
3-3 Hysteresis Loop of Magnetic Core Material 3-9

SECTION 4

4-1A Model GRN-200A Dual Noise Generator, Rear View 4-3
4-1B Model GRN-200A Dual Noise Generator, Bottom View. 4-3
4-2A Model CP-10A Control Panel, Top View 4-4
4-2B Model CP-10A Control Panel, Rear View. 4-4
4-3 Magnetic Amplifier Assembly. 4-6
4-4A Light Dependent Resistor Assembly. 4-7
4-4B Light Dependent Resistor Assembly, Test Point Locations 4-7
4-5 Model AMD-10 Meter Amplifier. 4-11
4-6 Light Dependent Resistor Assembly (LDR), Channel Location 4-14
4-7A Model PA-1 Preamplifier, Top View 4-20
4-7B Model PA-1 Preamplifier, Bottom View 4-20
4-8A Model PA-2 Preamplifier, Top View 4-21
4-8B Model PA-2 Preamplifier, Bottom View 4-21
4-9A Model LA-3 Amplifier, Top View. 4-22
4-9B Model LA-3 Amplifier, Bottom View 4-22
4-10 Model 5LF-40A, Low Frequency Equalizer. 4-24
4-11 Model A-10 Filter Driver Amplifier 4-25
4-12 Model SSM-50A Scanner, Rear View 4-27
4-13 Model APS-10A Power Supply. 4-34
4-14 Model SSM-50A, Switch Lubrication 4-36

LIST OF TABLES

SECTION 1

Table		Page
1-1	Equipment Complement	1-4
1-2	Tube Complement	1-5
1-3	Semiconductor Complement	1-6

SECTION 2

2-1	Front Panel Controls, Indicators and Meters	2-3
2-2	$(g_{rms})^2$: Area under g(f) Curve for Slope Expressed in Constant db per octave	2-13

SECTION 4

4-1	Recommended Test Equipment	4-31
4-2	Troubleshooting	4-33
4-3	Model SSM-50A Selector Switch Lubrication Chart	4-36

ADDENDUM

MODEL ASDE-40 AUTOMATIC SPECTRAL DENSITY ANALYZER/EQUALIZER

I. GENERAL

Several design improvements have been made to render the Model ASDE-40 system readily adaptable to use with the Model HFSD High Frequency Extension. Certain other design improvements have been made to the console and components since production of the technical manual.

II. CHANGES FOR HFSD COMPATABILITY

a. The GRN-200A has been replaced by the improved GRN-200B. Differences between the two chassis include relocation of the 3,000 cps low-pass filter. The wide-band noise signal is selected directly by the front panel selector switch S1 and applied to dual triode amplifier V3. LEVEL potentiometer R6 has been moved to the noise source output circuit. A cathode follower tube V13 has been added for impedance matching between the output of the dual triode amplifier and the input to the low-pass filter. The operation and calibration procedures are the same as described in the instruction manual.

b. The CP-10A has been replaced by the improved Model CP-10B. Differences between the old and new units consist of additional connectors in parallel with the standard connectors for interconnections between the ASDE system and the HFSD high frequency extension. The connections are made to integrate circuits of the two systems. One interconnection allows use of the dynamic range indicators for all channels of both systems. A second interconnection is available for control of both systems from a single acceleration signal input. A final interconnection provides for mixing the signal outputs from the ASDE and HFSD systems and for control of overall gain of both systems with the LEVEL CONTROL of the CP-10B. These interconnections require the opening of certain operating circuits. When the ASDE system is operated without the HFSD, these open circuits must be closed through use of a dummy plug on the system access panel or jumper wires in the system cabling.

c. The Model SSM-50A has been replaced by the improved Model SSM-50B Scanner. The Model SSM-50B is designed to be compatable with the scanner in the Model HFSD High Frequency Extension. The X-axis resistor network is available for interconnection with the X-axis network of the Model HFSD to derive a continuous

X-axis drive over the combined frequency range of the two systems. The stepping switch driver circuit is opened and brought to the interface connector so that the scanners will step sequentially through all channels of the ASDE and then through all channels of the Model HFSD. When the ASDE system is used without the HFSD system, or during chassis calibration procedures, jumper connections must be made to close the stepping switch circuits. A dummy plug may be connected to the interface connector on the SSM-50B or to the access panel, or shorting jumpers may be connected in the system cabling.

d. A new access panel is supplied with the ASDE system. Connectors J1 through J8(the acceleration signal input connectors)have been replaced by two acceleration input connectors (J5 and J15). ACC IN connector J5 is available for connection of an acceleration input signal from an accelerometer impedance matching device. SFA IN connector J15 is used only when the optional Model ANA-101 Accelerometer Normalizing Amplifier is installed within the ASDE system. The normalizing amplifier provides power for and accepts the acceleration signal from the source follower amplifier Model SFA-100. When no Model ANA-101 is used in the ASDE system, the SFA IN connector has no function. When the ASDE is used without the Model HFSD, some circuit jumpering is required on connectors J11 and 12 to close circuits discussed in the paragraphs for the Models CP-10B and SSM-50B. The jumpering may be accomplished through the use of dummy plugs supplied for J11 and J12, or through jumper wires connected in system cabling to J11 and J12.

III. OTHER CHANGES

a. The front panel on the Model APS-10A has an additional component; an indicator lamp labeled THERMAL OVERLOAD. A thermostat (S1), opening at 150 $\pm$ 5 degrees Fahrenheit, has been added to protect all the power supplies against excessive heat. The THERMAL OVERLOAD lamp DS1 lights when the thermostat opens the power circuit.

b. The Ling Model A-10 Driver Amplifier described as one component of the Model ASDE-40 system has been replaced by the Ling Model A-10A Driver Amplifier described in this addendum. Note the operational connections as illustrated on drawing 43949. Note particularly that the cable connections are made between the 8-ohm and 16-ohm terminals with shields tied to ground. When using the Model A-10A, the SPEECH MUSIC switch must be set to MUSIC and the LOW Z HI Z switch must be set to LOW Z. Potentiometer R5 is a mid-frequency

drive balance adjustment, and potentiometer R10 is the plate current balance adjustment.

IV. DIRECT MANUAL CHANGES

Make the following changes to the pages and paragraphs noted:

Page 3-4

DELETE: last sentence of paragraph f(1).

ADD: in place of deleted sentence:

A 6-volt zener diode is connected across the meter circuit to prevent overload of the meter movement and averaging capacitors. It also prevents voltage overload of the meter amplifier in the event the range switch is accidently switched to a lower range while operating at a comparatively high level. Without this diode, such accidental operation could effectively open circuit the servo feedback control loop.

Page 4-13.

CHANGE: Subparagraph c(1) as follows:

0.1 ± 0.01 volt rms to read 0.05 ± 0.01 volt rms.

CHANGE: Subparagraph c(3) as follows:

0.15 volt at 15 cps to read 0.03 volt at 15 cps.

Page 4-25 and 4-26.

CHANGE: paragraph 4-8e as follows:

e. Model A-10A(MO-30A) Filter Driver Amplifier. (Refer to drawing 43949.)

(1). Test equipment.

(a). Refer to table 4-1 for standard test equipment required.

(b). 8-ohm, 50-watt resistor.

(c). Attenuator pad(20 db steps).

(2). Preliminary settings and connections.

(a). connect instrumentation ground to ground of output terminals.

(b). Connect the 8-ohm, 50-watt resistor between the 8-ohm tap and the 16-ohm tap on the output terminals.

NOTE

Remove any jumper which may be between common and ground. No jumper is required.

(c). Set the oscillator for 1,000 cps and 0 volt.

(d). Connect the oscillator through the attenuator pad to the LOW Z BAL input of the A-10A.

(e). Set the attenuator pad for 20 db attenuation.

(f). On the side of the Model A-10A, set the power switch to on.

(g). Set the VOLUME CONTROL fully clockwise.

(h). Set the input terminal switches to MUSIC and LOW Z.

(3). Distortion.

(a). Apply power to the Model A-10A.

(b). Adjust the oscillator to obtain 8.0 volts rms across the 8-ohm, 50-watt resistor.

(c). The input voltage should be 0.4 volts rms $\pm$20%.

(d). Adjust potentiometer R5 (adjacent to the balance potentiometer) for minimum distortion at 1 kc. The output distortion should be less than 1% from 50 cps to 2,000 cps.

(e). Adjust the oscillator for 2 volts rms at 10 cps at the output of the amplifier.

(f). Adjust the balance potentiometer R10 for minimum distortion. Distortion should be less than 3%.

(g). Take distortion measurements at 50 cps, 100 cps, 500 cps, and 2,000 cps with an 8 volt rms output. Distortion should be less than 1%.

(4). Frequency response.

(a). Adjust the oscillator for an amplifier (A-10A) output of 1 volt at 1 kc.

(b). The response from 10 cps to 2,000 cps should be flat ±0.5 db.

(5). Hum and noise.

(a). Disconnect the oscillator.

(b). Short the amplifier input.

(c). Hum and noise should be 80 db below 8.0 volts.

(d). Set the VOLUME CONTROL fully counterclockwise.

Page 4-26.

ADD: in paragraph f(1):

(d). One mating connector for interface connector J6 on the SSM-50B. Install jumpers to connect pin J to K and pin E to F on interface connector J6.

ADD: In procedure (2):

(a). Install the dummy plug in interface connector J6.

Page 4-27.

CHANGE: in step (3)(c):
1 to read 45 (two places).

CHANGE: Step (3)(d) as follows:

(d). On the filter deck, connect a jumper across the 100 ufd capacitor for channel 45.

CHANGE: Step (3)(e) as follows:

(e). Short the channel 45 jumper to ground.

Page 4-28.

CHANGE: Step (3)(j) as follows:

(j). Remove the ground jumper from channel 45. Maintain the jumper across the input capacitor.

CHANGE: Step (3)(k) as follows:

(k). Connect 0.5 vdc to the channel 45 jumper.

CHANGE: Step (3)(o) as follows:

(o). Connect the oscillator to the channel 45 jumper.

CHANGE: Step (r) as follows:

(r). Remove the oscillator, the AC VTVM, and the channel 45 jumper on the filter deck.

Page 4-37.

CHANGE: The engineering drawings list as follows:

42420	Block Diagram Functional
32931	Schematic Meter Amplifier
32755	Schematic Magnetic Amplifier
44240	Schematic LDR
31156	Schematic Amplifier PA-1.
31157	Schematic Amplifier PA-2.
44819	Schematic, Control Panel CP-10B
31158	Schematic Amplifier LA-3.
20966	Schematic Meter/Meter Range Switch
32782	Schematic Mode Selector Switch
31299	Schematic APS-10-A
50253	Schematic Dual Noise Generator GRN-200B
32634	Schematic Relay Assembly
43949	Schematic MO30A Modified
32997	Modification to standard MO-30A
44864	Schematic Low Frequency Equalizer 5LF
50217	Simplified Schematic SSM-50B
44637	Access Panel Interconnection Diagram

Page 4-37.

ADD: 4-14. OTHER DOCUMENTATION

Manual for Bogen Model MO-30A Amplifier

T-161-3-4-5B Transformer Specification Sheet

SECTION I - DESCRIPTION AND CHARACTERISTICS

1-1. GENERAL

a. The Ling Electronics Automatic Spectral Density Analyzer/Equalizer, Model ASDE-40 is designed for use in random noise vibration testing systems. The unit provides three basic functions:

(1). The Analyzer permits continuous acceleration spectral density measurement of vibration system acceleration.

(2). Internally generated random noise is shaped through the use of identical filter systems in the equalizer and analyzer. Individual channel gain potentiometers produce the desired spectral density of the output.

(3). Automatic control of the acceleration spectral density may be accomplished by individual servo amplifiers in each channel.

b. The Model ASDE-40 covers a frequency range from 10 cps to 2050 cps in 45 separate channels with bandwidths of 50 cps or less. The first six channels at the low frequency extreme have bandwidths of from 10 cps to 14 cps for improved control of large specimen, low frequency resonances.

c. The analyzer receives its input signal from an accelerometer. After amplification, the signal is applied to passive LC bandpass filters. The output from each filter is applied to an associated meter amplifier. The output from each amplifier drives a precision meter movement to indicate the acceleration spectral density for the associated channel.

d. A scanner (Model SSM-50A) is supplied for analyzer readout on an XY recorder. The scanner has an adjustable sweep rate during automatic scanning operation. The scanner may also be switched manually to monitor the output from an individual analyzer channel.

e. Dual random noise generators with suitable filter driving amplifiers are included. Each generator feeds alternate filters in parallel. External noise sources may be used if desired.

f. The spectral density shaping potentiometers are fully enclosed to prevent contamination and resultant erratic operation. In the automatic mode of operation, the potentiometers control the servo loop gain; in the manual mode of operation, they control the channel gain.

g. The output from the metering amplifier (for each channel) is sampled by a magnetic servo amplifier. Light dependent resistors (driven by the magnetic amplifiers) control the output from each equalizer filter.

h. If a specimen under test is suspected of exhibiting non-linear characteristics, or is thought to be failing due to fatigue, the channel or channels of interest may be switched to manual operation while the remainder of the frequency range continues to be controlled automatically.

NOTE

Each channel may be operated automatically or manually.

i. A CAL position (on the Model CP-10A) is provided to allow the system to be adjusted, in advance of a given test, for either a flat or shaped spectrum. When in the CAL position, all controls are adjusted to obtain the desired response, and operation of the servos and meters is within the normal range.

In the CAL position, there is no accumulation of test time on the specimen.

j. Switching from CAL to operate immediately inserts the random signal into the amplifier at 20 db below the full level. The accelerometer input has its input gain control ganged to the output control and has 20 db additional gain in this position, thereby maintaining servo level and operation in the desired dynamic range. The servos compensate for specimen response.

k. As the LEVEL control is advanced the ganged accelerometer and system attenuators complement each other. No additional servo action is necessary except that required by non-linearities in the specimen.

1-2. PURPOSE

The purpose of the Model ASDE-40 is to permit continuous measurement of acceleration spectral density of a random signal, to generate random noise of a gaussian distribution, and to provide automatic control of the acceleration spectral density by the use of automatic servos.

1-3. SPECIFICATIONS

a. System

Power requirements.	117 vac, 60 cps at 9 amps.
Dynamic range.	Greater than 50 db.
Frequency range.	10 cps to 2,050 cps.
Output voltage	2v rms maximum.
Output impedance	600 ohms (balanced or unbalanced).
Output waveform.	Normal or gaussian distribution from built in random-noise source.
Analyzer input signal sensitivity . .	10 mv rms/g rms.
Analyzer input impedance.	10,000 ohms.
Hum and noise.	60 db below 1v.
Weight	1,400 pounds (approx.).

b. Servo and Control

Servos	45 (one per channel).
Dynamic range.	Greater than 50 db.
Servo Accuracy	25 db change can be controlled to within $\pm$0.5 db of a pre-selected level.
	50 db change can be controlled to within $\pm$1.0 db of a pre-selected level.

Speed of correction	Less than 5 seconds required to correct a 50 db step change.
Spectrum shaping potentiometers . .	45 (one per channel).

c. Metering

g^2/cps	45 individual channel readout on meters calibrated in g^2/cps.
Above 2,000 cps	Calibrated in g rms.
Accuracy	$\pm$0.5 db.
Ranges	3 ranges are selectable in 10 to 1 steps for a given calibration on each meter.

NOTE

With an input signal of 10 mv/g, the meters are calibrated directly in g^2/cps on the following ranges: 0.01 to 0.1, 0.1 to 1.0 and 1.0 to 10 g^2/cps. Higher g^2/cps is available by the attenuation of accelerometer input signal levels.

DRI meters	Panel mounted meters which indicate the optimum compression level (dynamic range, maximum and minimum).

d. Filters

Number for equalizers	45.
Number for analyzers	46.
Type	LC passive.
Stability	0.04 cps per degree C.
Rejection at skirts	Greater than 60 db down at 175 cps from center frequency; greater than 30 db down at 75 cps from center frequency.
Single channel rejection capability	16 db (typically 20 db).
Dual channel rejection capability . .	26 db (typically 30 db).
Ripple factor	$\pm$1.5 db.

e. Slope characteristics

UPPER 3DB POINT IN CPS	CHANNEL	DB PER OCTAVE
2,000	45	1,080
1,000	25	540
500	14	270
200	8	108
100	6	94
70	5	126
56	4	95
43	3	77
31	2	70
20	1	54

f. Bandpass

CHANNEL	RANGE AT 3DB CROSSOVER POINTS IN CPS	BANDWIDTH IN CPS
1	10 to 20	10
2	20 to 31	11
3	31 to 43	12
4	43 to 56	13
5	56 to 70	14
6	70 to 100	30
7 to 45	100 to 2050	50 each
46	2050 and above	(Analyzer only)

TABLE 1-1 EQUIPMENT COMPLEMENT

	DESCRIPTION	QUANTITY USED
	Light dependent Resistor Assembly No. 32744	15
	Model GRN-200A, Noise Generator 3694 J	1
	Model PA-2, Preamplifier	1
*	Model LA-20-05-B, Power Supply	1
	Model CM-40A, Mode Selector	1
	Model SSM-50A Scanner 3694 H	1
	Model CP-10A, Control Panel 3694 F	1
	Model PD-10-B, Power Distribution Panel	1

TABLE 1-1 EQUIPMENT COMPLEMENT (cont)

	DESCRIPTION	QUANTITY USED
	Magnetic Amplifier Assembly No. 32791	45
	Model 5LF-40A, Low Frequency Equalizer	1
*	Filament Power Supply No. PS10750	1
	Model SE-40, Equalizer Assembly	1
	Model SA-40B, Meter Assembly	1
*	Model A-10, Driver Amplifier 3694K	1
	Model MR-40-1, Meter Range Selector	1
	Model AMD-10, Meter Amplifier	45
	Model AMD-11, Meter Amplifier	1
	Model APS-10A, Power Supply Assembly	1
*	(a). Model RPM-400-250, Regulated Power Module	1
*	(b). Model RPM-100-250, Regulated Power Module	1
*	(c). Model PS-1130, Power Supply	1
	Model LA-3, Amplifier	1
	Model PA-1, Preamplifier	1

* Units supplied as part of the system, but described in a separate technical manual.

TABLE 1-2 TUBE COMPLEMENT

Model GRN-200A, Noise Generator

DESIGNATION	TYPE	FUNCTION
V1 and V2	6D4	Noise generator
V3	7025	Preamplifier
V4	7199	Amplifier and phase inverter
V5 and V6	6BQ5	Push-pull power amplifier
V7	7025	Preamplifier
V8	7199	Amplifier and phase inverter
V9 and V10	6BQ5	Push-pull power amplifier
V11 and V12	5687	Cathode follower

Model LA-3, Amplifier (Part of the Model CP-10A, Control Panel)

DESIGNATION	TYPE	FUNCTION
V1A and V1B	7025	Voltage amplifier
V2	5687	Cathode follower

Model PA-2, Preamplifier

DESIGNATION	TYPE	FUNCTION
V1A and V1B	7025	Voltage amplifier
V2	12AT7	Cathode follower

Model PA-1, Preamplifier (Part of the Model CP-10A, Control Panel)

DESIGNATION	TYPE	FUNCTION
V1A and V1B	7025	Voltage amplifier

TABLE 1-3 SEMICONDUCTOR COMPLEMENT

Magnetic Amplifier Assembly No. 32791

DESIGNATION	TYPE	FUNCTION
CR1	TI56	Full wave rectifier
CR2	TI56	Full wave rectifier
CR3	TI56	Voltage limiter
CR4	TI56	Voltage limiter
Q1	2N3053	Shunt regulator
Q2	2N404	Amplifier

Model SSM-50A, Scanner

DESIGNATION	TYPE	FUNCTION
CR1 through CR47	1N2071	Steering diodes
CR48	1N721A	Zener diode
CR49	1N718A	Zener diode
CR50	1N718A	Zener diode
CR51	1N2071	Transient suppressor
CR52	1N2071	Transient suppressor

TABLE 1-3 SEMICONDUCTOR COMPLEMENT (cont)

DESIGNATION	TYPE	FUNCTION
Printed circuit card 31547		
SCR1	2N1771C	Silicon controlled rectifier
CR1 through CR4	1N2071	Full wave bridge rectifier
CR5	2N2071	Half wave rectifier
Q1	2N1671	Oscillator

Light Dependent Resistor Assembly No. 32744

DESIGNATION	TYPE	FUNCTION
CR1, 6, 11	TI56	Transient suppressor
CR2, 7, 12	TI56	Steering diode
CR3, 8, 13	TI56	Voltage limiter
CR4, 5, 9, 10, 14,15	TI56	Logic network
Q1	2N404	Relay driver
Q2	2N649	Amplifier
Q3	2N649	Emitter follower
Q4	2N404	Relay driver
Q5	2N649	Amplifier
Q6	2N649	Emitter follower
Q7	2N404	Relay driver
Q8	2N649	Amplifier
Q9	2N649	Emitter follower

Model AMD-10, Meter Amplifier

DESIGNATION	TYPE	FUNCTION
CR1	1N723A	Voltage regulator
CR2 through CR5	TI56	Full wave bridge rectifier
Q1	TI495	Voltage amplifier
Q2	TI495	Voltage amplifier
Q3	2N3053	Voltage amplifier
Q4	2N3053	Emitter follower
Q5	TI487	Emitter follower
Q6	2N379	Emitter follower

Model GRN-200A, Dual Noise Generator

DESIGNATION	TYPE	FUNCTION
CR1 and CR2	TI56	Clipper
CR3 and CR4	TI56	Clipper
CR5 and CR6	TI56	Transient suppressor
CR7	TI56	Transient suppressor

Model MR-40-1, Meter Range Selector

DESIGNATION	TYPE	FUNCTION
CR1 (40 per assembly)	RS-6	Voltage limiter
CR2 (1 per assembly)	TI56	Transient suppressor

Relay Assembly

DESIGNATION	TYPE	FUNCTION
CR1	1N718A	Voltage limiter
CR2	TI56	Voltage limiter
CR3	TI56	Transient suppressor
CR4	15A5PA5	Transient suppressor
CR5	15A5PA5	Transient suppressor
Q1	2N404	Relay driver

Card Rack

DESIGNATION	TYPE	FUNCTION
(No designation)	1N1607	Zener

2-1. INSTALLATION (refer to figure 2-1)

a. Initial installation of the Model ASDE-40 is accomplished by the customer. The customer is also responsible for supplying the necessary interconnecting cables to accessory equipment. When technical assistance is desired, arrangements may be made for Ling field service personnel to assist in initial checkout, test, and briefing instructions.

b. As soon as the system is received, inspect the individual components for shipping damage, loose knobs and components, or other defects.

c. System interconnections are illustrated in Ling drawing number 43086. Figure 2-1 is a dimensional drawing for use during installation.

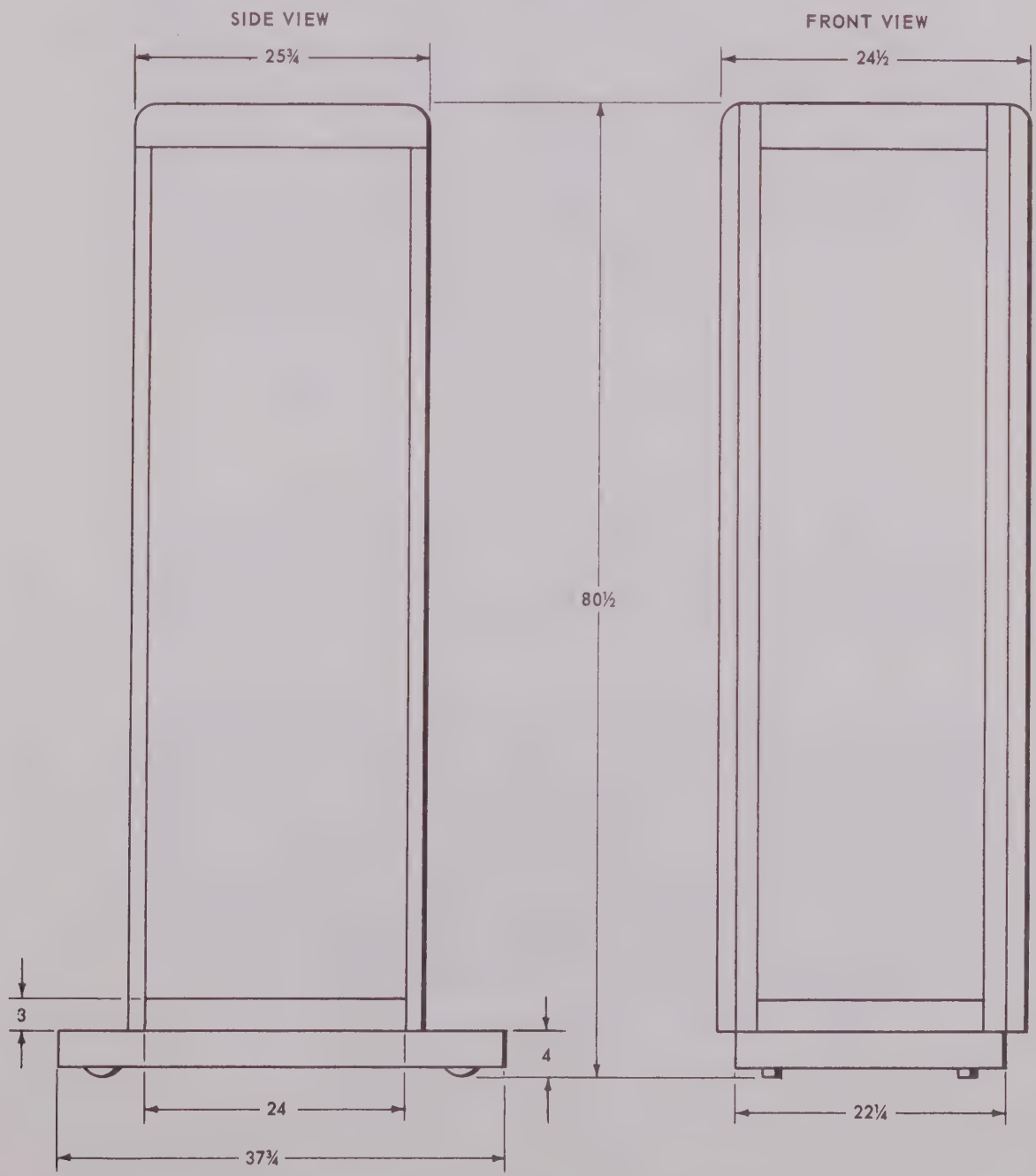

Figure 2-1 Model ASDE-40, Outline Drawing

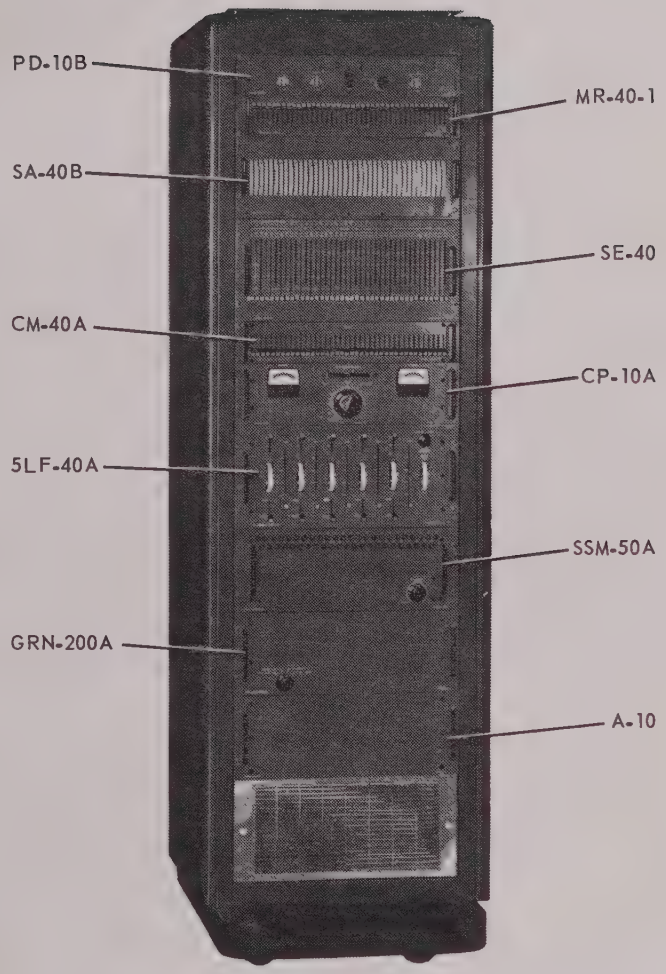

Fig. 2-2A Location of Major Parts

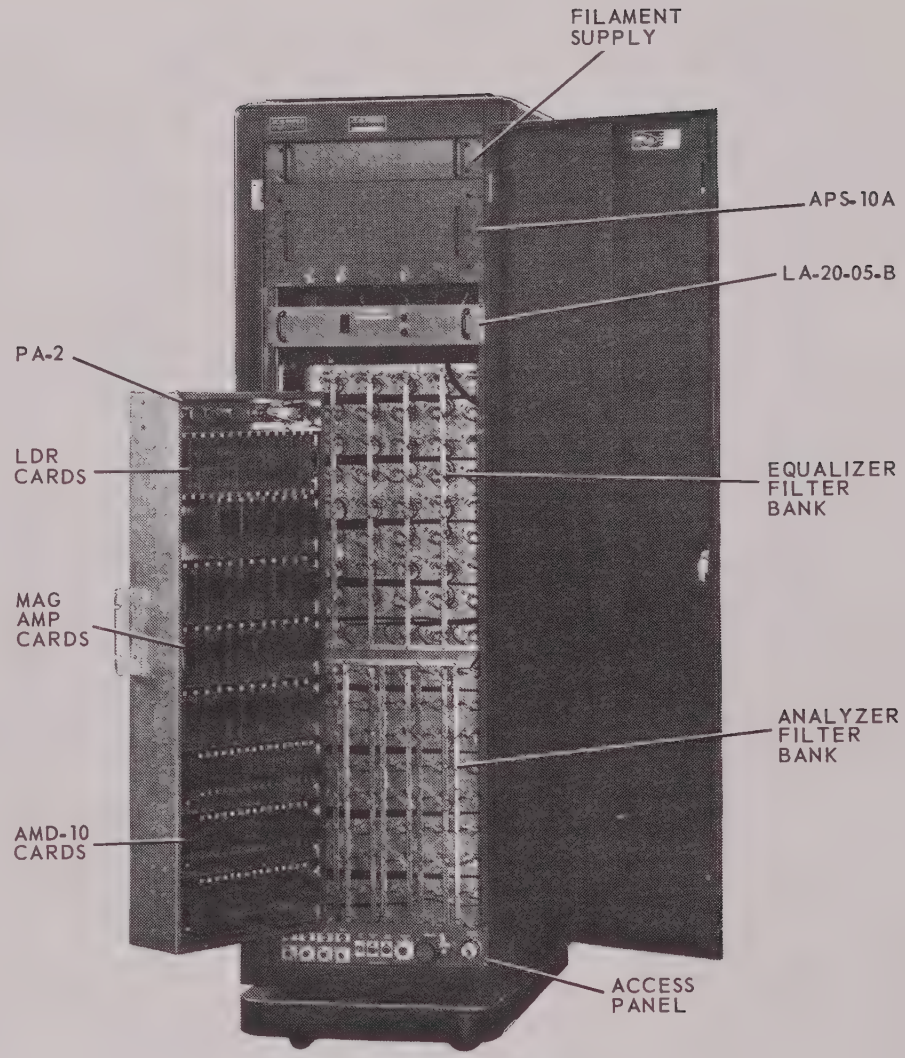

Fig. 2-2B Location of Major Parts

TABLE 2-1 FRONT PANEL CONTROLS, INDICATORS AND METERS

Model PD-10-B, Power Distribution Panel (refer to figure 2-3)

PANEL MARKING	DESIGNATION	DESCRIPTION AND FUNCTION
LINE	S1	15 ampere circuit breaker; protects against overload and applies 115 vac 60 cps power to the unit.
PLATE SUPPLIES	F1	Fuse and light indicator; in normal operation the light is out. The light indicates an open fuse due to overload. The fuse protects the +250V, -250V and the 50V, 800 cps supplies.
BLOWER	F2	Fuse and light indicator; in normal operation the light is out. The light indicates an open fuse due to overload. The fuse protects the Model A-10 Driver Amplifier, the Model SSM-50A Scanner, and the blowers.
FIL.	F3	Fuse and light indicator; in normal operation the light is out. The light indicates an open fuse due to overload. The fuse protects the 6.3 vdc filament supply and the TS-121R-12 supply.
ON	IS1	Red light indicator; indicates that power is being applied to the unit.

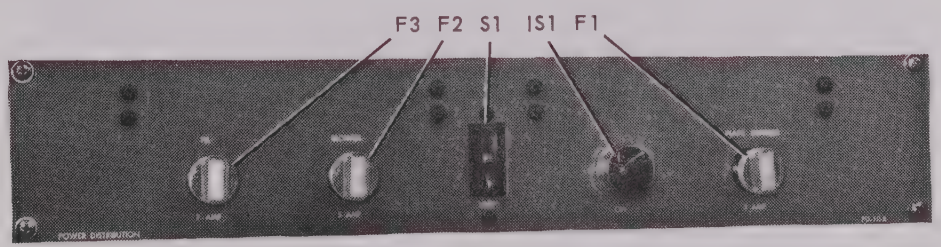

Fig. 2-3 Model PD-10B Power Distribution Panel

Model MR-40-1, Meter Range Selector (refer to figure 2-4)

PANEL MARKING	DESIGNATION	DESCRIPTION AND FUNCTION
0.1, 1.0 and 10 (meter range)	S6 through S45	3 position lever switches; select the range for the corresponding meter. The range switch indicates the maximum range from 10 g^2/cps, 1.0 g^2/cps, and 0.1 g^2/cps. Each switch may be used individually although they are mounted in a single physical assembly. Two assemblies are used.

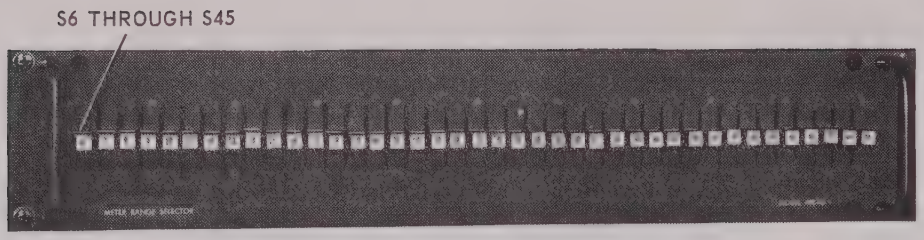

Fig. 2-4 Model MR-40-1 Meter Range Selector

Model SA-40B, Meter Assembly (refer to figure 2-5)

PANEL MARKING	DESIGNATION	DESCRIPTION AND FUNCTION
6 through 45	None	40 edgewise meters; these meters indicate the acceleration spectral density for channels 6 through 45 as determined by the range switch position. Each meter is calibrated from 0.01 to 1.0 (square law scale). The channel numbers are marked above the meters.

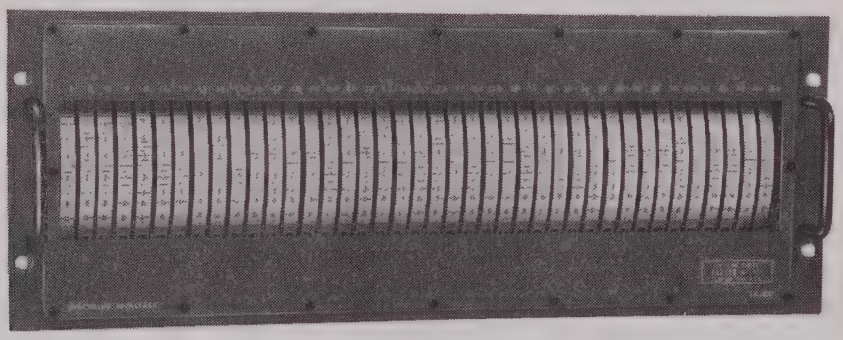

Fig. 2-5 Model SA-40B, Meter Assembly

Model SE-40, Equalizer Assembly (refer to figure 2-6)

PANEL MARKING	DESIGNATION	DESCRIPTION AND FUNCTION
spectrum shaping potentiometers (CHANNEL FREQUENCY RANGE channels 6 through 45)	R1 through R80	40 ganged pairs of potentiometers; one potentiometer of each pair controls the attenuation of the equalizer for its channel when in the manual mode of operation; the other potentiometer controls the servo loop gain when in the automatic mode of operation. Forty control levers on the front panel operate each pair of potentiometers independently.

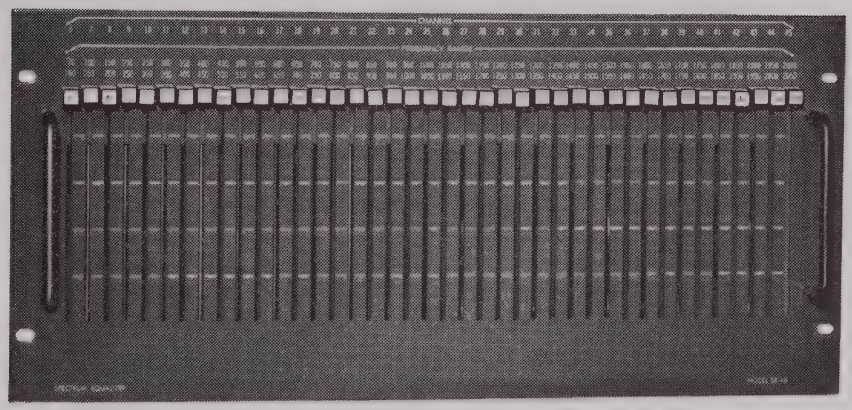

Fig. 2-6 Model SE-40, Equalizer Assembly

Model CM-40A, Mode Selector (refer to figure 2-7)

PANEL MARKING	DESIGNATION	DESCRIPTION AND FUNCTION
mode selector (AUTOMATIC-MANUAL)	S6 through S45	40 two position lever switches; either AUTOMATIC or MANUAL mode of operation may be selected for each channel. Each switch may be used individually although they are mounted in a single physical assembly.

Fig. 2-7 Model CM-40A, Mode Selector

Model CP-10A, Control Panel (refer to figure 2-8)

PANEL MARKING	DESIGNATION	DESCRIPTION AND FUNCTION
MINIMUM MAXIMUM	M1 and M2	Meters; indicate whether or not the system is operating within its dynamic range. If either of the meters indicate in the red area, the unit may not be operating within its dynamic range.
LEVEL CONTROL	R5	Dual attenuator; a 10K ladder section is used in the accelerometer input circuit (attenuation increases with clockwise rotation). A 600 ohm bridged T section is used in the system output circuit (attenuation decreases with clockwise rotation). When placed in the fully counterclockwise position (CAL), the system

PANEL MARKING	DESIGNATION	DESCRIPTION AND FUNCTION
		output is connected to the accelerometer input. The servo loop is closed and the system may be pre-programmed for the desired spectral density curve. As the control is rotated clockwise, the output is increased in 1/2 db steps while the signal level (within the ASDE-40) remains constant. The servo system retains its full dynamic range and compensates for non-linearities of the specimen. Short bursts, or successively increasing levels of acceleration, may be programmed.
ACCELEROMETER SELECTOR 1, 2, 3, 4	S1	Pushbutton selectors; the desired accelerometer input may be selected by pressing the appropriate selector button (1 through 4).

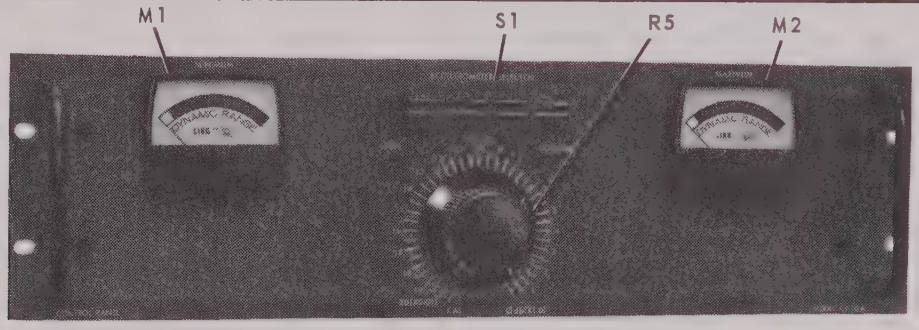

Fig. 2-8 Model CP-10A, Control Panel

Model 5LF-40A, Low Frequency Equalizer (refer to figure 2-9)

PANEL MARKING	DESIGNATION	DESCRIPTION AND FUNCTION
NO PANEL MARKING (channel 1 through 5)	M101, M201, M301, M401 and M501	Meters (special edgewise scale); indicate the acceleration spectral density determined by the position of the range switch. The meters are calibrated from 0.01 to 1.0 (square law scale).
range switches 1 through 5	S102, S202, S302, S402 and S502	Lever switches; select three different ranges; 0.1, 1.0 and 10.
equalizers 1 through 5	R101, R201, R301, R401, R501, R102, R202, R302, R402, and R502	Five ganged pairs of potentiometers; one potentiometer of each pair controls the attenuation of the equalizer for its channel when in the MANUAL mode of operation. The other potentiometer controls the servo loop gain when in the AUTOMATIC mode of operation. Five control levers on the front panel operate each pair of potentiometers independently.
METER DAMPING	S1	Rotary switch; applies 55 vdc to relays located in the MR-40-1 chassis to select the value of the capacitor in the meter averaging circuit. A total of 10,000 mfd is selected for high damping and 2,000 mfd for low damping, giving a 5 to 1 change in time constant. Permits rapid examination of the curve during initial programming, and when

Model 5LF-40A, Low Frequency Equalizer (cont)

PANEL MARKING	DESIGNATION	DESCRIPTION AND FUNCTION
		non-linear specimens are encountered. This affects the meter damping of the SA-40B and the 5LF-40A, but does not affect the servo time constant.
ABOVE 2 KC	M1	Meter (special edgewise scale); indicates the energy content in the frequency band from 2,050 cps to 10,000 cps. The meter is calibrated (linear scale) from 0 to 10 and indicates in g rms.
mode selectors 1 through 5 (MAN-AUTO)	S101, S201, S301, S401 and S501	Five two-position lever switches; either automatic or manual mode of operation may be selected for channels 1 through 5 by placing the channel selector up (MAN) or down (AUTO).

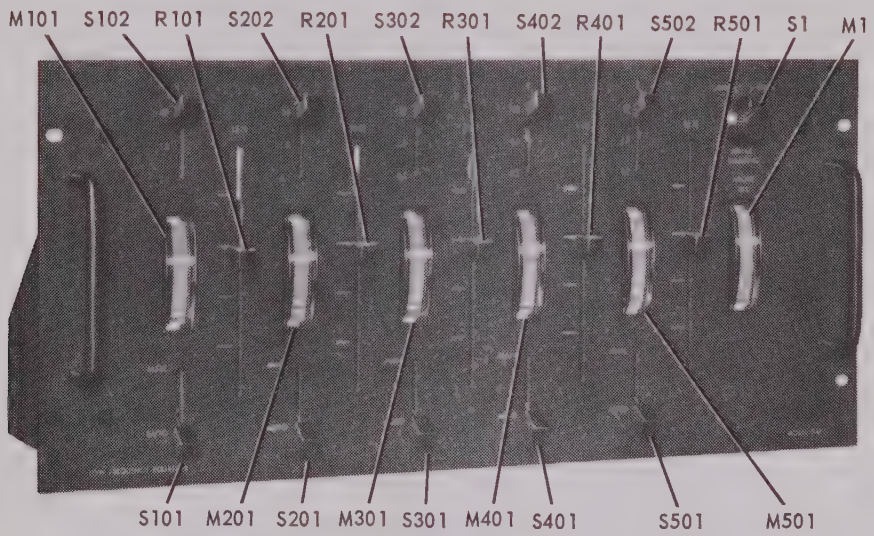

Fig. 2-9 Model 5LF-40A, Low Frequency Equalizer

Model GRN-200A, Dual Noise Generator (refer to figure 2-10)

PANEL MARKING	DESIGNATION	DESCRIPTION AND FUNCTION
function switch (DUAL AUX/SINGLE AUX/STANDBY/ INT. NOISE)	S1	Four position rotary selector switch; in the SINGLE AUX position, +250 vdc is removed from the noise generator tubes and preamplifiers. The inputs of the power amplifiers are paralled and connected to the AUX input connector. In the STANDBY position, the inputs of the power amplifiers are grounded to the signal ground circuit. In the INT. NOISE position, +250 vdc is applied to the noise tubes and preamplifiers. The inputs of the power amplifiers are connected to the outputs of the preamplifiers. In the DUAL AUX position, two external noise sources may be used, taking advantage of non-phase coherent drive.

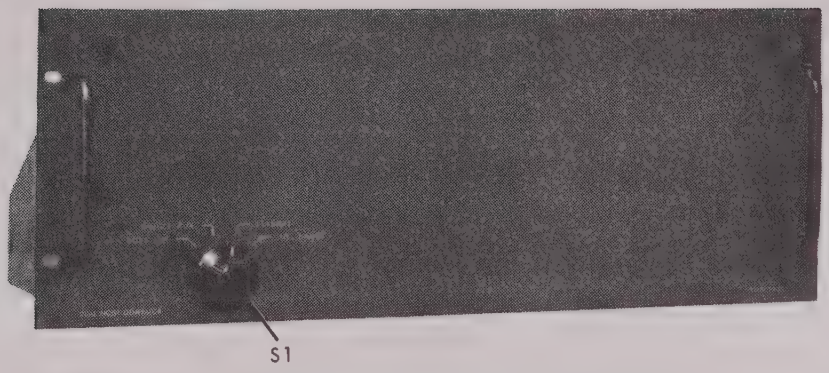

Fig. 2-10 Model GRN-200A, Dual Noise Generator

Model APS-10A, Power Supply Assembly (refer to figure 2-11)

PANEL MARKING	DESIGNATION	DESCRIPTION AND FUNCTION
FUSE 3A SB	F1	Fuse and light indicator; in normal operation, the light is out. The light indicates an open fuse due to overload. The fuse protects the RPM-400-250 power supply.
FUSE 1A SB	F2	Fuse and light indicator; in normal operation, the light is out. The light indicates an open fuse due to overload. The fuse protects the RPM-100-250 power supply.
FUSE 1A SB	F3	Fuse and light indicator; in normal operation, the light is out. The light indicates an open fuse due to overload. The fuse protects the PS-1130 power supply.
FUSE 3A	F4	Fuse and light indicator; in normal operation the light is out. The light indicates an open fuse due to overload. The fuse protects the PS-1130 power supply.

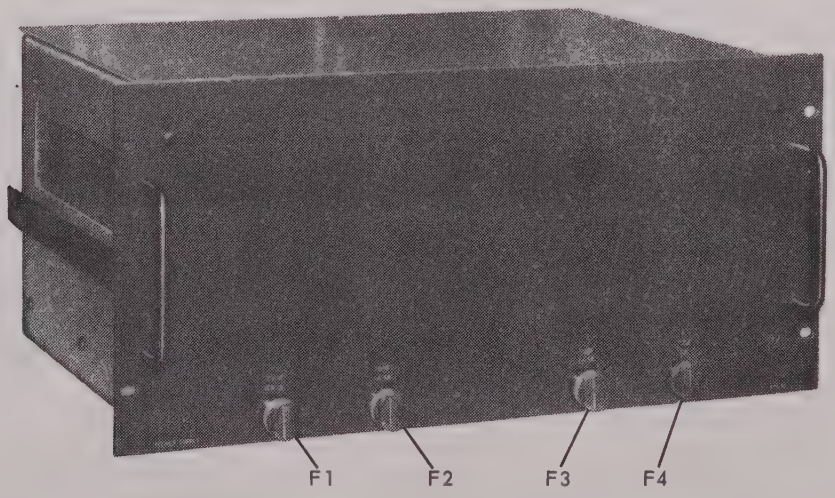

Fig. 2-11 Model APS-10A, Power Supply Assembly

Model SSM-50A Scanner (refer to figure 2-12)

PANEL MARKING	DESIGNATION	DESCRIPTION AND FUNCTION
1 through 45, REF. H. F.	S1 through S47	Back-lighted pushbutton indicator; indicates which channel is being scanned and plotted. The H. F. (high frequency) pushbutton indicator is used for the ABOVE 2 KC channel.
SCAN SPEED	S48	Rotary selector switch; when in the manual mode of operation, the channel to be plotted must be pressed. To plot all channels (1 through 45 and above 2 kc), it is necessary to manually select each channel. In the automatic mode of operation, the SCAN SPEED may be adjusted for 1 step per second to approximately 8 steps per second.

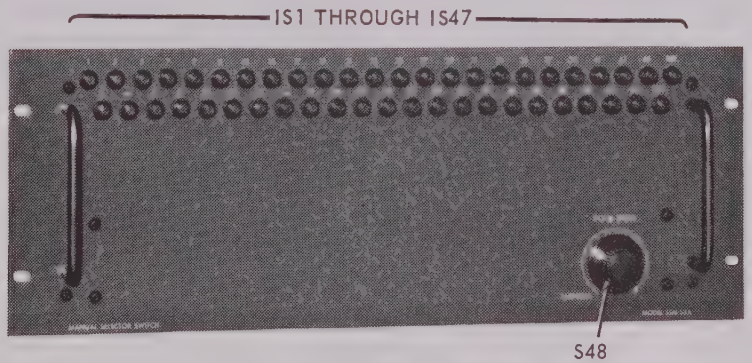

Fig. 2-12 Model SSM-50A Scanner

Access Panel (refer to figure 2-13)

PANEL MARKING	DESIGNATION	DESCRIPTION AND FUNCTION
ACC1 ACC2 ACC3 ACC4	J5 and J1 J6 and J2 J7 and J3 J8 and J4	Multipin connectors; J1, J2, J3, and J4 are provided to accomodate accelerometer preamplifiers (Endevco type 2614). J5, J6, J7, and J8 are wired in parallel with the accelerometer output of the Endevco 2614 connectors. These connectors may be used for external monitoring of the accelerometer signals, or they may be used for accelerometer input from preamplifiers or cathode followers other than the Endevco 2614 accelerometer preamplifiers.
AUX IN	J9	Multipin connector; used to connect external noise sources.
SYSTEM OUT	J10	Multipin connector; used to connect the system output to the console.
CALIB SIGNAL	J13	Multipin connector; used for the field calibration of the analyzer. The accuracy of this check is ±1 db.

Access Panel (cont)

PANEL MARKING	DESIGNATION	DESCRIPTION AND FUNCTION
SCANNER OUT	J11	Multipin connector; used to connect the scanner output to an X-Y recorder.
CONSOLE	J12	Multipin connector; matches the connections of J5, J6, J7, J8, J9, J10, J11, and J13, allows the use of one cable.
AC INPUT 120V 10A	J14	Receptable; main power receptable.

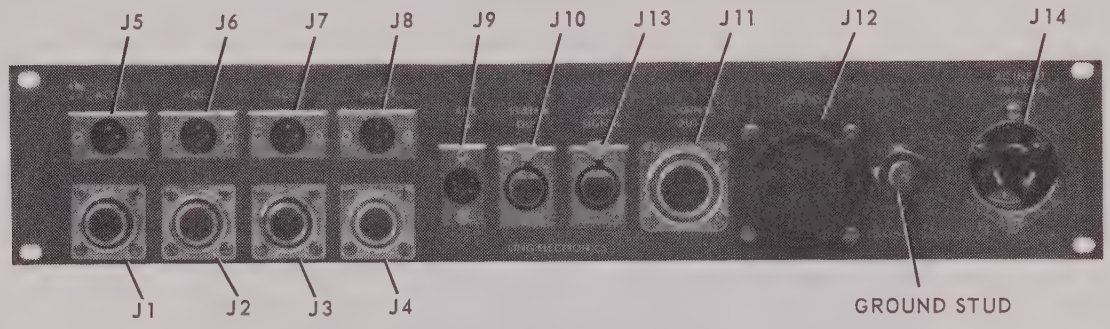

Fig. 2-13 Access Panel

2-2. OPERATING PROCEDURES

a. Preparation:

(1). Determine the overall rms acceleration level and acceleration power spectral density indication for each meter. These values will depend on the test specification. The following examples illustrate the way in which these values may be determined:

(a). Example 1.

When the specification calls for 20g rms white noise, distributed from 20 cps to 2,000 cps over a flat spectrum, then:

$$g_o = \frac{(g_{rms})^2}{B} = \frac{(20)^2}{(2000\text{-}20)} = 0.2g^2 \text{ per cycle (approximately)}$$

(b). Example 2.

If the specification calls for a constant acceleration spectral density of 0.2 g^2 per cps from 20 cps to 2,000 cps (white noise), then

$$g_o = 0.2\ g^2 \text{ per cps}$$

and

$$g_{rms} = \sqrt{g_o B} = \sqrt{0.2 \times (2000\text{-}20)} = 20\ g_{rms} \quad \text{(approximately)}$$

(c). Example 3.

Another specification might call for an acceleration spectral density of 0.1 g^2 per cps from 20 cps to 200 cps and 0.2 g^2 per cps from 200 cps to 2,000 cps (see solid line of figure 2-14). This specification (calling for an infinite attenuation rate at the transition frequency) is theoretically impossible, and can only be approached. When the transition frequency corresponds to equalizer filter crossover frequency (between two filters), maximum slope can be obtained. In the usual case, transition frequencies will not coincide with crossover frequencies and the attainable slope will be less. A compromise resembling the dotted line in figure 2-14 will be necessary. For this example:

$g_1 = 0.1\ g^2$ per cps (20 to 200)

$g_2 = 0.2\ g^2$ per cps (200 to 2000)

g_{rms} is given by the square root of the sum of the mean-square values of acceleration in the two portions of the spectrum, as follows:

$$g_{rms} = \sqrt{g_1 B_1 + g_2 B_2} =$$

$$\sqrt{0.1\ (200\text{-}20) + 0.2\ (2000\text{-}200)} = 19.4g \quad \text{(approximately)}$$

NOTE

Adding the two g_{rms} values arithmetically will not give an overall true rms value. They must be added as shown.

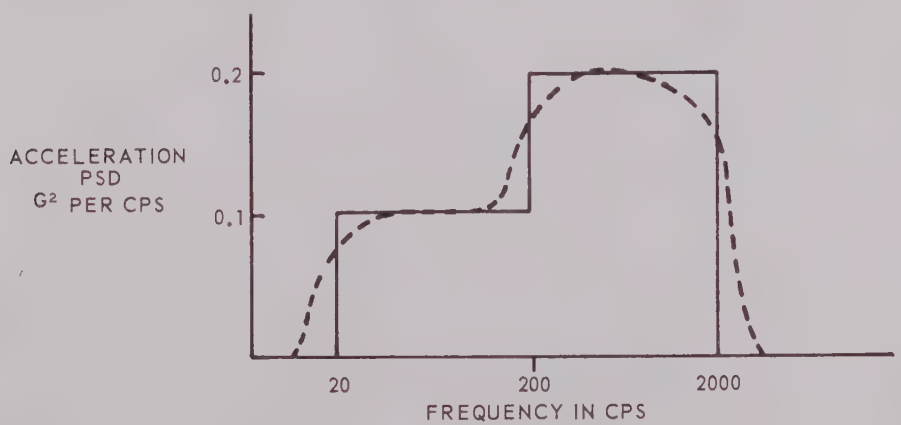

Fig. 2-14 Model ASDE-40, Two Level Test Specification

(d). Example 4.

The problem is more complicated when the specification calls for a sloping curve. Specifications often require a roll-off characteristic above some frequency or between two frequencies, expressed in terms of db per octave. A specification may also require a given rate of rise in the curve expressed in db per octave. The roll-off spectrum, plotted on logarithmic graph paper (both axes,

logarithmic), has the shape shown in figure 2-15. Values of g_o, for each channel reading, can be obtained by reading the coordinates directly off the graph. To determine the rms value, find the square root of the area under the curve of g(f) vs. f plotted on linear graph. Consider the g(f) vs. f curve shown in figure 2-16. This curve is a plot of:

$$g(f) = \frac{K}{f^n}$$

which must be satisfied at two specified frequencies, f_1 and f_2, by the values g_1 and g_2. Therefore,

$$g_1 = \frac{K}{f_1^n} \text{ and } g_2 = \frac{K}{f_2^n}$$

Constant K is then,

$$K = g_1 f_1^n = g_2 f_2^n$$

For an octave relationship between f_2 and f_1, $f_2 = 2f_1$. Thus,

$$\frac{g_1}{g_2} = \left(\frac{f_2}{f_1}\right)^n = 2^n$$

If $\frac{g_1}{g_2}$ is specified in db, then

$$db = 10 \text{ Log } \frac{g_1}{g_2} = 10 \text{ Log } 2^n = 3n \text{ (approximately)}$$

The exponent n is therefore equal to db/oct divided by 3. If the specifications calls for 3 db per octave roll-off, then g(f) is proportional to 1 divided by f; for 6 db 1 divided by f^2, and so on. To find the area under the g(f) vs. f curve, we must integrate as follows:

$$A = \int_{f_1}^{f_2} \frac{g_1 f_1^n}{f^n} \, df = g_1 f_1^n \left[\frac{f^{1-n}}{1-n}\right]_{f_1}^{f_2}, = g_1 f_1^n \frac{f_2^{1-n} - f_1^{1-n}}{1-n}$$

$$\text{or } A = \frac{g_1 f_1}{n-1}\left[1 - \left(\frac{f_1}{f_2}\right)^{n-1}\right] \quad n \neq 1$$

For the special case of n = 1 (3 db per octave).

$$A = \int_{f_1}^{f_2} \frac{g_1 f_1}{f} \, df = g_1 f_1 \left[\text{Log}_e f\right]_{f_1}^{f_2} =$$

$$g_1 f_1 \text{ Log}_e \frac{f_2}{f_1} = 2.3 \, g_1 f_1 \text{ Log } 10 \frac{f_2}{f_1} \text{ (approximately)}$$

Table 2-2 lists these areas for values of n of 1 through 8, corresponding to slopes from 3 db to 24 db per octave. To find g_{rms}, take the square root of the area given, but remember that this gives the g_{rms} under the sloping portion of the curve only. The total g_{rms} must be found by finding the total area (including the rectangular portion of the curve) and then taking the square root of the total area. g_{rms} values may not be added directly.

TABLE 2-2

$(g_{rms})^2$: Area under g(f) curve for slope expressed in constant db per octave

db per Octave	m or n	Rising g_a, f_a to g_b, f_b $f_b > f_a$	Falling g_1, f_1 to g_2, f_2 $f_2 > f_1$	Rising $g_a = f_a = 0$	Falling $g_2 = 0, f_2 = \infty$
3	1	$\frac{g_b B}{2}\left[1 + \frac{f_a}{f_b}\right]$	$2.3 g_1 f_1 \text{Log}_{10} \frac{f_2}{f_1}$	$\frac{g_b f_b}{2}$	∞
6	2	$\frac{g_b B}{3}\left[1 + \frac{f_a}{f_b} + \left(\frac{f_a}{f_b}\right)^2\right]$	$g_1 B \frac{f_1}{f_2}$	$\frac{g_b f_b}{3}$	$g_1 f_1$
9	3	$\frac{g_b f_b}{4}\left[1 - \left(\frac{f_a}{f_b}\right)^4\right]$	$\frac{g_1 f_1}{2}\left[1 - \left(\frac{f_1}{f_2}\right)^2\right]$	$\frac{g_b f_b}{4}$	$\frac{g_1 f_1}{2}$
12	4	$\frac{g_b f_b}{5}\left[1 - \left(\frac{f_a}{f_b}\right)^5\right]$	$\frac{g_1 f_1}{3}\left[1 - \left(\frac{f_1}{f_2}\right)^3\right]$	$\frac{g_b f_b}{5}$	$\frac{g_1 f_1}{3}$
15	5	$\frac{g_b f_b}{6}\left[1 - \left(\frac{f_a}{f_b}\right)^6\right]$	$\frac{g_1 f_1}{4}\left[1 - \left(\frac{f_1}{f_2}\right)^4\right]$	$\frac{g_b f_b}{6}$	$\frac{g_1 f_1}{4}$
18	6	$\frac{g_b f_b}{7}\left[1 - \left(\frac{f_a}{f_b}\right)^7\right]$	$\frac{g_1 f_1}{5}\left[1 - \left(\frac{f_1}{f_2}\right)^5\right]$	$\frac{g_b f_b}{7}$	$\frac{g_1 f_1}{5}$
21	7	$\frac{g_b f_b}{8}\left[1 - \left(\frac{f_a}{f_b}\right)^8\right]$	$\frac{g_1 f_1}{6}\left[1 - \left(\frac{f_1}{f_2}\right)^6\right]$	$\frac{g_b f_b}{8}$	$\frac{g_1 f_1}{6}$
24	8	$\frac{g_b f_b}{9}\left[1 - \left(\frac{f_a}{f_b}\right)^9\right]$	$\frac{g_1 f_1}{7}\left[1 - \left(\frac{f_1}{f_2}\right)^7\right]$	$\frac{g_b f_b}{9}$	$\frac{g_1 f_1}{7}$

B = Bandwidth in cps = $f_b - f_a$ or $f_2 - f_1$ as appropriate

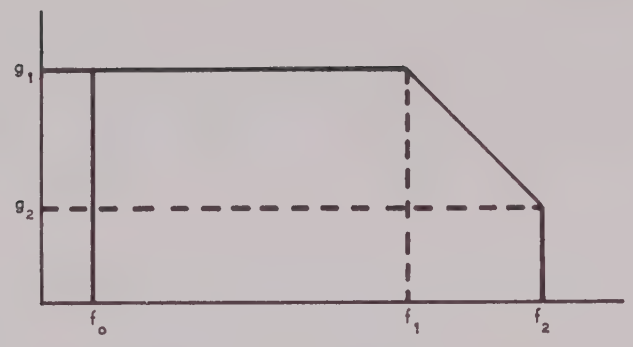

Fig. 2-15 Model ASDE-40, Spectrum With Roll-off Plotted With Logarithmic Scales on Both Axes

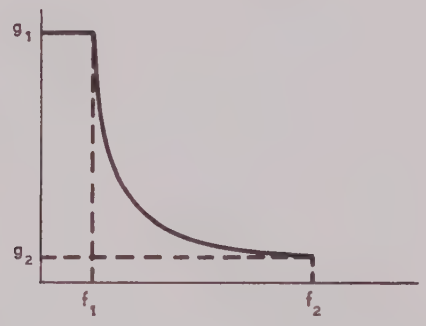

Fig. 2-16 Model ASDE-40, Roll-off Portion of Spectrum Plotted With Linear Scales on Both Axes

The above assumes that the attenuation rate becomes infinite at the frequency f_2. If the roll-off continues at the same rate, we have $f_2 = \infty$ and $g_2 = 0$, so

$$A = g_1 f_1^{\,n} \frac{f_1}{f_1^{\,n}(n-1)} = \frac{g_1 f_1}{n-1} \quad \text{for } n \neq 1$$

For n = 1, A = ∞ and the specification is indeterminate

A similar situation holds for rising characteristics at the low end of the spectrum. See figures 2-17 and 2-18 for typical plots on logarithmic and linear scales, respectively. In this case,

$$g(f) = Kf^m, \quad g_a = Kf_a^{\,m}, \quad g_b = Kf_b^{\,m}, \; K = \frac{g_b}{f_b^{\,m}}, \; \frac{g_b}{g_a} = \left(\frac{f_b}{f_a}\right)^m = 2^m$$

So that m = db divided by 3. Area A (under the sloping portion of the curve) is

$$A = \int_{f_a}^{f_b} \frac{g_b}{f_b^{\,m}} f^m \, df = \frac{g_b}{f_b^{\,m}} \left[\frac{f^{m+1}}{m+1}\right]_{f_a}^{f_b} = \frac{g_b}{f_b^{\,m}(m+1)} \left[f_b^{\,m+1} - f_a^{\,m+1}\right]$$

So that

$$A = \frac{g_b f_b}{m+1} \left[1 - \left(\frac{f_a}{f_b}\right)^{m+1}\right]$$

Values of the area A for this case are given in table 2-2 (for m values 1 through 8) corresponding to slopes of 3 db to 24 db per octave.

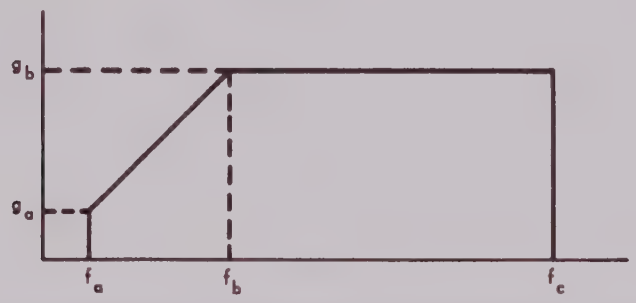

Fig. 2-17 Model ASDE-40, Spectrum With Rising Characteristic Plotted With Logarithmic Scales on Both Axes

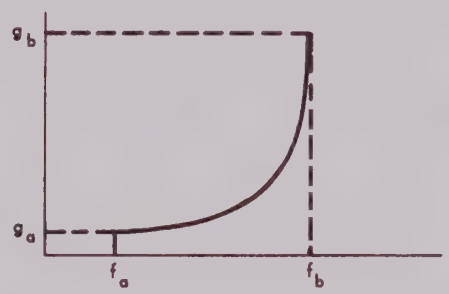

Fig. 2-18 Model ASDE-40, Rising Portion of Spectrum Plotted With Linear Scales on Both Axes

(e). Example 5.

With the preceding examples in mind, the specification (example 4) might call for a rising slope of 12 db per octave from 20 cps to 47 cps, rising from 0.01 (20 cps) to 0.3g^2 per cps (47 cps); after this, rise time is then constant at 0.3 g^2 per cps from 47 cps to 1,390 cps; then it rolls off at 9 db per octave from 1,390 cps to 2,000 cps at 0.1 g^2 per cps at 2,000 cps. For the rising portion, m = 12 divided by 3. For the falling portion, n = 9 divided by 3. Refer to table 2-2 for these values:

$g_a = 0.01,\ f_a = 20,\ g_1 = 0.3,\ f_1 = 1390$

$g_b = 0.3,\ f_b = 47,\ g_2 = 0.1,\ f_2 = 2000$

We find the two areas to be:

$$\text{Rising } A_r = \frac{0.3 \times 47}{5}\left[1-\left(\frac{20}{47}\right)^5\right] = 2.8g^2$$

$$\text{Falling } A_b = \frac{0.3 \times 1390}{2}\left[1-\left(\frac{1390}{2000}\right)^2\right] = 107.4\ g^2$$

The rectangular portion of the curve has an area that is:

$A_c = 0.3\ (1390-47) = 402.9\ g^2$

Adding up the three areas, we obtain $513.1\ g^2$. (Note that in this example, due to the steep rise assumed, the contribution of the low frequency portion of the total g_{rms} is negligible). The desired g_{rms} is the square root of 513.1 or 22.65 g (approximately).

b. Operation.

NOTE

The Model ASDE-40 Automatic Spectral Density Equalizer/ Analyzer is calibrated for use with an accelerometer having a sensitivity of 10 mv rms per g rms. Other devices in the vibration testing field may use accelerometers having a sensitivity calibration of 10 mv rms per g vector (peak). A sensitivity of 10 mv rms per g vector equals 14.14 mv rms per g rms. Care should be taken to use an acceleration signal of proper sensitivity.

(1). Presetting a flat spectrum.

NOTE

The power amplifier and other auxiliary equipment need not be energized during the following procedure. The ASDE-40 will be connected as a closed loop within itself.

(a). On the power distribution panel (PD-10-B), set the LINE circuit breaker to the ON position.

(b). On the control panel (CP-10A), rotate the LEVEL CONTROL to the CAL position.

(c). On the MR-40-1, set the meter range switches for the applicable meter range.

(d). On the SE-40, set all spectrum shaping potentiometers to their minimum positions (down).

(e). On the CM-40A, set all mode selector switches to AUTOMATIC.

NOTE

The range switches, spectrum shaping potentiometers, and mode selector switches for the first five low frequency channels are located on the 5LF-40A.

(f). On the GRN-200A, set the function switch to INT. NOISE.

(g). On the 5LF-40A, set the METER DAMPING switch to LOW.

(h). Adjust the spectrum shaping potentiometers for channels 6 and 45 until the approximate desired indications are obtained on the corresponding meters.

(i). On the 5LF-40A, set the METER DAMPING switch to HIGH.

(j). Make fine adjustments of the spectrum shaping potentiometers for the exact level desired.

(k). Using a straight edge across the spectrum shaping potentiometers of step j, set all other spectrum shaping potentiometers in the same position.

NOTE

All meters should indicate at the approximate desired level. Make small adjustments of the individual spectrum shaping potentiometers to obtain the exact level required within the allowable tolerance. The spectrum shaping potentiometers for the five lower frequency channels must be individually adjusted using the respective meters. Be sure to allow sufficient averaging time after each adjustment.

(2). Presetting a shaped spectrum.

Follow the flat spectrum procedure, except select channels which define cardinal points on the desired spectrum for the individual adjustments. Use a straight edge or template to obtain approximate settings of the spectrum shaping potentiometers for intermediate points. Make fine adjustments of the individual spectrum shaping potentiometers to obtain the exact levels desired.

c. Test Operation.

(1). On the Model CP-10A, select the desired accelerometer by pressing the appropriate ACCELEROMETER SELECTOR pushbutton.

(2). Set the system (console) master gain control fully counterclockwise.

(3). Energize the power amplifier and accessory equipment.

(4). On the CP-10A, rotate the LEVEL CONTROL one position clockwise.

(5). Adjust the system master gain control slightly clockwise.

NOTE

The indications on the spectral density meters may have started to fall, but will return to the preset levels when the system begins operation.

(6). Continue to advance the system master gain control until the indication of the MINIMUM compression meter is in the green region.

(7). The MAXIMUM compression meter indicates the compression required at the most sensitive frequency region on the specimen. For proper control, the indication should be in the green region.

NOTE

If a spectrum shaping potentiometer has been set to minimum, its associated channel may be forced into severe compression. Operation under this condition is permissable, but the MAXIMUM compression meter will indicate off scale.

(8). On the CP-10A, adjust the LEVEL CONTROL clockwise to the zero position while observing the compression meters. Adjust the system master gain control as necessary to maintain compression meter indications in the green zone.

NOTE

With the LEVEL CONTROL fully clockwise, the meters accurately indicate the acceleration spectral density at the accelerometer control point.

(9). To stop operation, set the LEVEL CONTROL on the CP-10A to the CAL position, and set the system master gain control fully counterclockwise.

d. Test operation at successively increasing levels of the same spectrum shape.

(1). Determine the highest test level to be used.

(2). Perform the flat spectrum or shaped spectrum procedure to obtain the desired spectrum shape.

(3). Determine the other required levels in terms of decibels. Where the levels are given in g rms, use the formula:

$$db = 20 \log_{10} \frac{\text{highest level in g rms}}{\text{desired level in g rms}}$$

Where the levels are given in terms of acceleration spectral density (g^2/cps), use the formula:

$$db = 10 \log_{10} \frac{\text{highest level in } g^2/\text{cps}}{\text{desired level in } g^2/\text{cps}}$$

(4). Perform the test as described in step c (Test Operation) except advance the LEVEL CONTROL on the CP-10A to the decibel figure representing the first level specified.

(5). At the end of the first test period, set the LEVEL CONTROL to the decibel figure representing the next required level of acceleration.

NOTE

Any number of acceleration levels in steps of 1/2 db may be obtained within the 20 decibel range of the LEVEL CONTROL. There is no servo delay or overshoot during change from one level to another since the attenuators in the accelerometer input and system output are inversely proportional to each other. The indications of the spectral density meters remain constant regardless of the setting of the LEVEL CONTROL. Test specifications requiring very short duration bursts of noise may be met since there is no servo delay or overshoot. Only non-linear response of the specimen will require compensation.

e. Manual Operation.

NOTE

Any channel, group of channels or all channels may be operated manually at any time.

(1). On the CM-40A, set the desired mode selector switches to MANUAL.

(2). Readjust the corresponding spectrum shaping potentiometer as necessary to obtain the desired test level indication on the corresponding meter.

CAUTION

IF THE CHANNEL IN QUESTION IS IN A FREQUENCY REGION WHERE THE SYSTEM RESPONSE IS HIGH, A LEVEL OF ACCELERATION DENSITY HIGHER THAN PROGRAMMED MAY BE OBTAINED WHEN SWITCHING FROM AUTOMATIC TO MANUAL MODE OF OPERATION. IF THIS IS LIKELY, SET THE SPECTRUM SHAPING POTENTIOMETER TO MINIMUM BEFORE SWITCHING FROM AUTOMATIC TO MANUAL OPERATION.

(3). To return to automatic operation, readjust the spectrum shaping potentiometer to its former position and place the mode selector switch in the AUTOMATIC position. The servo will first introduce full compression in this channel, but will recover after a few seconds.

NOTE

Operation with one or more channels in the manual mode will cause the MAXIMUM compression meter to indicate in the red region. The MINIMUM compression meter will continue to accurately indicate minimum compression levels of the channels remaining in automatic mode.

f. Permanent record of test.

NOTE

A plot of the acceleration spectral density may be obtained by use of the Model SSM-50A Scanner, a log converter, and an XY recorder. The scanner may also be used to obtain a greater confidence of meter indications. The averaging time may be effectively increased by scanning all channels repeatedly.

(1). Connect the log converter to the Y output of the scanner (dc signal available in the scanner output connector on the access panel at the rear of the Model ASDE-40). Refer to drawing number 43086.

(2). Connect the Y input of the XY recorder to the log converter output.

(3). Connect the X input of the recorder to the X output of the scanner (available in the scanner output connector on the access panel at the rear of the Model ASDE-40). Refer to drawing number 43086.

(4). Select channel 1 by pressing the button marked 1 on the scanner panel.

(5). Using linear graph paper, set the X axis zero adjustment on the XY recorder so that the pen falls to the left hand edge of the paper.

(6). Select channel 45 by pressing the botton marked 45 on the front panel of the scanner.

(7). Set the X axis gain adjustment on the XY recorder so that the pen falls to the right hand edge of the paper. The X axis of the XY recorder is now calibrated for a linear frequency presentation.

(8). Adjust the Y axis gain on the XY recorder, and the scale factor switch on the log converter as desired. To obtain a plot in terms of g^2/cps, use semi-log graph paper (log y axis) and adjust the plotter and log converter for $2 \log y = \log y^2$.

(9). Observe the indications on the individual spectral density meters and select a channel with the approximate value of some reference point on the graph.

(10). Select this channel by pressing the corresponding button on the panel of the scanner.

(11). Set the input attenuator of the log converter and the zero adjustment of the XY recorder so that the recorder pen averages about the selected reference line on the paper.

(12). Set the SCAN SPEED adjustment on the panel of the scanner for the scanning speed desired and set the XY recorder pen onto the graph paper. Allow the scanner to sweep through all channels several times to obtain a large number of samples for each channel, resulting in greater confidence.

(13). Select a slow scanning rate in the low frequency channels. Adequate time must be allowed for the plotter to respond from zero (on retrace) to the value of acceleration spectral density of these channels.

NOTE

The above procedure gives a log presentation of acceleration density versus linear presentation of frequency. The Y output of the scanner may be connected directly to the Y axis of the plotter for a linear presentation of acceleration density (not acceleration density squared). It may be desireable to use an external time delay network on either the X or Y axis for a readable display depending upon relative time constant and transient response of the plotter. The log converter (when used) will usually accomplish this.

SECTION 3 - PRINCIPLES OF OPERATION

3-1. GENERAL

a. In random wave vibration testing, it is convenient to work with rms values of such quantities as displacement and acceleration. The rms value of an ac current (i) is equivalent to the dc current that would produce the same heat in a dissipating element over the same period of time. The instantaneous power (p) dissipated in a resistance (R) through which current (i) is flowing is $p = i^2R$. Of more interest is the mean (average) power (P) over some interval of time (t_2-t_1). This is given by:

$$P = \frac{1}{t_2-t_1}\int_{t_1}^{t_2} Pdt = \frac{1}{t_2-t_1}\int_{t_1}^{t_2} i^2\, dt = I^2R$$

Where we define,

$$i^2 = \frac{1}{t_2-t_1}\int_{t_1}^{t_2} i^2\, dt = \text{mean square current}$$

The time (t_2-t_1) required to obtain a useful indication for a random wave input is a function of bandwidth.

b. It is important to distinguish between the randomness and the spectrum of a signal. Randomness relates to amplitude, and is defined in terms of the probability that at any given instant, the wave amplitude will exceed a specified value. Spectrum relates to frequency. A signal having a wide bandwidth is not necessarily random and a random signal does not necessarily have a wide bandwidth. If the signal is truly random, there is a very small but definite probability that occasional amplitude peaks will exceed any stated value. In practical systems these peak amplitudes are necessarily limited by equipment considerations. Therefore, practical random wave signals are not truly random.

c. If a signal is both random and has a wide bandwidth (theoretically infinite; not achievable in practical systems), it is said to be white noise. Any frequency within this frequency range will have the same energy content as any other frequency in this range when measured over an infinite length of time (equal energy content over the entire range). What we are concerned with in dealing with either white noise or random signals of narrow bandwidth, is the power represented by the signal as related to the rms value. It is necessary to employ the concept of acceleration spectral density. This is analogous to mass density over a volume; acceleration density is distributed over a frequency spectrum. Summation of individual mass over the entire volume yields mass; summation of acceleration density over a frequency spectrum yields the mean square value of acceleration over that spectrum. Units of acceleration spectral density are g^2/cps (where g is the acceleration due to gravity; 32.2 ft per sec^2 or 386 in. per sec^2). These units are analogous to i^2 or e^2 per cps in the case of electrical quantities. Acceleration spectral density g is defined as:

$$g = \lim_{B \to 0} (a^2/B)$$

where a = rms value of acceleration

B = bandwidth in which "a" is measured.

If B is made to approach zero, acceleration spectral density g approaches that of a single component frequency. As a result, white noise may be thought of as consisting of an infinite number of frequencies, each with amplitude infinitely small for zero bandwidth. A plot of acceleration spectral density of each component versus frequency (figure 3-1) is analogous to a power spectral density curve (PSD). When the curve is flat (all frequency components present with equal energy contribution), we have white noise.

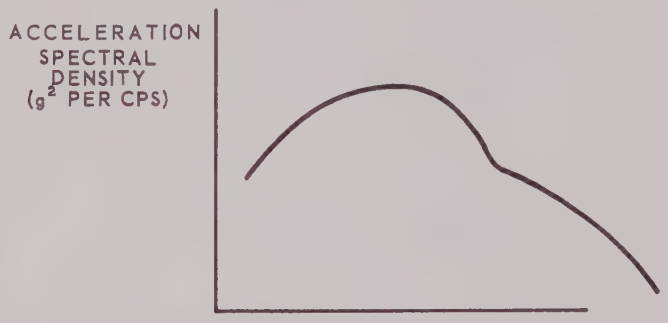

Fig. 3-1 Model ASDE-40, Acceleration Spectral Density Curve

d. The total rms vibration level represented by a particular acceleration spectral density curve can be determined by finding the area under the curve; that is, by integrating the curve with respect to frequency:

$$g^2 \text{ rms} = \int_{f_1}^{f_2} g(f)\, df$$

Where g(f) = acceleration spectral density expressed as a function of frequency. Since the integral of the previous equation is the area under the curve, the same area can be determined numerically by:

$$g^2 \text{ rms} = \sum_{f_1}^{f_2} gf\ \Delta f$$

Where g_f = discrete values of g(f) taken at many small intervals of Δf in the band of f_1 to f_2. g_{rms} is the square root of the value obtained with either equation. For a flat spectrum of any specified bandwidth, g(f) is constant at some value of g_o.

g_{rms} is given by:

$$g \text{ rms} = \sqrt{g_o (f_2 - f_1)}$$

or,

$$g \text{ rms} = \sqrt{g_o B}$$

Where B is the bandwidth $f_2 - f_1$. Conversely,

$$g_o = \frac{g^2 \text{rms}}{B}$$

Example: If the value of g_o is given as 0.2 g^2 per cps, and B is given as 2,000 cps,

$$g_{rms} = \sqrt{0.2 \times 2000} = 20g$$

e. The preceding is intended as only introductory material and not as a complete explanation of system operation or of random wave vibration testing theory. In the following paragraphs, the Model ASDE-40 system will be described in detail.

3-2. ASDE-40 AUTOMATIC SPECTRAL DENSITY EQUALIZER/ANALYZER (refer to drawing number 42420)

a. Four multipin connectors are provided on the access panel to accept Endevco type 2614 accelerometer preamplifiers. The preamplifiers are powered by supplies within the ASDE-40. Four additional connectors on the access panel (J5, J6, J7, and J8) are wired in parallel with the accelerometer inputs for external monitoring of the accelerometer signals, or for accelerometer inputs from preamplifiers or cathode followers other than the Endevco 2614.

NOTE

A preamplifier will normally be required since the input impedance of the Model ASDE-40 is 10,000 ohms.

b. One of the accelerometer signals is selected by the accelerometer selector switch on the control panel, and connected through the system level control. The system level control consists of a 20 db ladder attenuator ganged with a 600-ohm bridged-T 20 db attenuator in the system output circuit. When the LEVEL CONTROL is in the fully counterclockwise position (CAL), two microswitches connect the system output to the accelerometer input, closing the system upon itself so that a desired spectrum shape may be established without accumulation of test time on the specimen.

c. When the LEVEL CONTROL is advanced to the first position clockwise from the CAL position, the signal output to the power amplifier is attenuated by 20 db and the accelerometer input circuit has an additional 20 db of sensitivity. At this point, shaker and system responses effecting the acceleration spectrum will be equalized while operating the system at a low level. As the LEVEL CONTROL is advanced clockwise, attenuation is removed from the system output and inserted in the accelerometer channel in corresponding 1/2 db steps so that the signal levels within the Model ASDE-40 remain constant while the acceleration level at the shaker is undergoing change. No servo action is required within the Model ASDE-40. By adjusting to one of its partial attenuation settings, the LEVEL CONTROL can be used to establish operation below the normal calibrated system levels. The LEVEL CONTROL may also be used to establish progressively higher levels of acceleration of the same spectrum shape, without requiring servo action, avoiding time delay or overshoot.

d. In normal operation, the signal from the ladder attenuator is connected to the PA-1 preamplifier (sub-chassis of CP-10A). The PA-1 is a low noise amplifier providing gain and impedance matching to the A-10 filter driver power amplifier.

e. The narrow band filters used in the ASDE-40 necessarily have very high Q circuits. Resonant buildup in these high Q circuits results in large voltages from low input signals. Dynamic plate voltage limiting in the A-10 power amplifier is utilized to protect the filters from excessive inputs. A 510-ohm resistor matches the nominal 500-ohm input impedance of each filter. The output from each filter is connected to a meter amplifier. From this point, the circuitry is identical for each channel. Only one channel will be discussed.

f. The transistorized meter amplifier is stabilized by a large amount of negative current feedback. A full wave bridge rectifier is used at the output of each amplifier and is included in the feedback loop. The output current from each amplifier is unfiltered, rectified narrow band noise.

There are three circuits included in the output current loop of the meter amplifier:

(1). The first element in the meter amplifier current loop is the meter movement, its shunt resistors, and averaging capacitor. Shunt resistors determining full scale sensitivity are selected by the meter range switch. The current in the meter circuit is proportional to the acceleration density within the bandwidth of the particular filter used. Indications in terms of acceleration squared per cps (g^2/cps) is accomplished by the square law scale of the meter. Two averaging time constants are provided. A damping switch, located on the 5LF-40A panel, controls a relay in the meter range chassis to switch one capacitor in or out of the circuit for either HIGH or LOW damping. A 6-volt zener diode is connected across the meter circuit to prevent overload and possible damage to the meter movement, averaging capacitors, and meter amplifier.

(2). The second element in the meter amplifier current loop is the scanner sampling resistor. The voltage drop across the resistor, due to meter amplifier current, is connected through a pair of 33k resistors to an averaging capacitor, where it is continuously available for monitoring. A fifty position stepping switch sequentially selects the voltage across each channel averaging capacitor and applies it to a differential amplifier. The switch stepping rate is variable from approximately 1 to 8 steps per second. When the scanning rate control is fully counterclockwise, push-button indicators, through a diode gating circuit, enable manual channel selection. The differential amplifier is a transistorized operational amplifier in a subtractor circuit. The amplifier has unity gain, delivering a single ended dc output. The differential amplifier output is proportional to the average acceleration density in the channel. This output along with a dc voltage proportional to the frequency of each channel may be connected to an XY plotter for a permanent record of acceleration spectral density.

(3). The third element in the meter amplifier current loop is the spectrum shaping potentiometer. In manual operation, the mode selector shorts out this potentiometer. In automatic operation, a voltage is developed across this potentiometer, proportional to the acceleration density in each channel, and applied to the input of a magnetic amplifier. A bridge circuit in the magnetic amplifier input develops a bucking potential which opposes the potential across the shaping potentiometer. The polarity of these voltages ensure that no control will take place until the acceleration density within the particular channel rises to the level where the bucking voltage is overridden. Any additional increase in the acceler-

ation density, represented by the current in the meter amplifier output, will control the magnetic amplifier. The magnetic amplifier output is applied to the control lamp of a light dependent resistor. The photo-resistive element of the LDR is in series with the output from the equalizer filter. With no input, the magnetic amplifier output is at maximum, the LDR is on, and no attenuation takes place. When the current in the meter amplifier output circuit develops sufficient voltage across the automatic spectrum shaping potentiometer, a current flows in the control windings of the magnetic amplifier reducing the magnetic amplifier output. The light dependent resistor begins to introduce attenuation to oppose any further increase in acceleration density and meter amplifier current in the channel. The spectrum shaping potentiometer enables control of acceleration density throughout the range from approximately 0.005 g^2/cps to 10 g^2/cps.

g. The Model GRN-200A provides two complete noise generators, preamplifiers, and power amplifiers. Noise generator 1 drives all odd numbered filters and noise generator number 2 drives all even numbered filters in the equalizer bank. With adjacent filters driven by non-phase coherent signals, phase addition or cancellation at filter crossover points is random, avoiding peaks or valleys in the power spectrum distribution at the filter output. Each noise generator provides white random noise of gaussian distribution. The bandwidth is restricted to about 3,000 cps by low-pass filters.

h. In each noise generator power amplifier, dynamic plate voltage limiting is employed to avoid overdriving the filters. The power amplifier is stabilized by negative voltage feedback. Symmetrical clippers are used at each power amplifier input to limit noise peaks.

i. A front panel switch on the noise generator chassis allows use of external noise sources. The SINGLE AUX switch position provides parallel inputs for a single noise source, and DUAL AUX position selects separate channels for use of two noise sources. Both input signal channels are available on the access panel.

j. The manual spectrum shaping potentiometers are located in the input to each equalizer filter. A section of the mode selector switch shorts out the manual equalizing potentiometer when in automatic operation. In manual operation, the potentiometer establishes the gain for each channel. The input to the equalizer filter is paralleled by a 510-ohm resistor and in series with a second 510-ohm resistor. This arrangement minimizes the impedance variation of the driving source to the filter and matches the input impedance of the filter.

k. A 50k potentiometer is connected across the output from each filter. This potentiometer is adjusted to compensate for gain differences between filters. The output from the potentiometer is connected through the photo-resistive element of the light dependent resistor and through a 12,000-ohm mixing resistor to the mixing buss. In automatic operation, the resistance of the LDR photo-resistive element varies in response to the magnetic amplifier output, establishing the required attenuation for each channel. In manual operation, a dry reed relay energizes to bypass the LDR photo-resistive element, and a voltage clamp removes excitation to the LDR lamp.

l. From the LDR, the individual channel signals are applied to a common mixing buss connected to a high gain, low noise preamplifier (Model PA-2). The output from the PA-2 preamplifier is applied to the Model LA-3 amplifier and further amplified. The output from the LA-3 amplifier is applied to the 600-ohm bridged-T section of the LEVEL CONTROL and then to a 600-ohm line transformer terminating in the SYSTEM OUT connector on the access panel.

m. The magnetic amplifier output is connected to the control lamp of a light dependent resistor. The photo-resistive element of the LDR is in series with the output from the equalizer filter.

n. A specimen may have greater response at some frequencies than at others, as evidenced in the accelerometer signal. Where the meter amplifier output has a greater response than programmed on the channel automatic spectrum shaping potentiometer, the output from the magnetic amplifier for this channel will be reduced resulting in less drive to the control lamp of the light dependent resistor. The photo-resistive element of the LDR will increase in resistance and introduce attenuation into the channel. When the specimen has a reduced response, the output from the magnetic amplifier will be increased, lowering the resistance of the LDR. The automatic spectrum shaping potentiometer enables control of acceleration density in the range of from approximately 0.005 g^2/cps to 10 g^2/cps.

o. The system gain must be sufficiently high at all frequencies to introduce some attenuation (operation must be somewhere within dynamic range in each channel). While it is possible to determine whether or not the system is operating within its dynamic range by interpretation of the meters, indications of the extremes of gain reduction will relieve the operator of a considerable burden. The LDR lamp current is a measure of the degree of attenuation of each channel. Each LDR lamp current is amplified and compared with the other channel lamp currents in two diode logic networks to select the channel having the most and the least gain reduction. A pair of front panel meters indicate whether operation is within the dynamic range of the system. The meter scales are marked in green for normal operation. If operation exceeds the dynamic range on any channel, the respective meter will indicate in the red region. In the case where there is insufficient system gain, the MINIMUM gain reduction meter indication warns the operator to advance the master gain control. Should the indication on the MAXIMUM gain reduction meter be in the red region, the operator can reduce the system gain.

p. The Model ASDE-40 requires approximately 9 amperes at 117 volts, 60 cps. A regulated dc filament power supply is provided. All other potentials are obtained from highly regulated power supplies resulting in extremely stable operation. All supplies are either fused or protected by circuit breakers against overload. A main line breaker (on the PD-10-B chassis) protects against overloads and removes all power within the unit when placed in the OFF position.

3-3. MODEL AMD-10 METER AMPLIFIER CIRCUIT DESCRIPTION (refer to drawing number 20960)

a. The Model AMD-10 is a transistorized amplifier utilizing negative current feedback for stability and to provide a constant current output into a variable load. A full-wave bridge rectifier (in the output circuit) is included in the feedback loop. The amplifier accepts a narrow band noise signal and delivers an unfiltered dc current to the meter circuit, scanner, and magnetic amplifier.

b. The input signal is applied to the base of voltage amplifier Q1. The output from Q1 is capacity coupled to the base of voltage amplifier Q2, with Q2 direct coupled to voltage amplifier Q3. Collector supply voltage for Q1 and Q2 is obtained through resistor R10, and regulated to 24 volts by zener diode CR1. The output from the collector of Q3 is direct coupled to the base of transistor Q4, an emitter follower providing the current gain required to drive the complementary emitter follower circuit (Q5 and Q6). The output from Q5 and Q6 is capacity coupled to full wave bridge rectifier CR2 through CR5. A sample of output current from the bridge rectifier is resistance coupled to the base of transistor Q1. Potentiometer R4 determines the amount of feedback controlling the gain of the amplifier. Since the amplifier is direct coupled between stages Q3, Q4, Q5, and Q6, the operating point of these stages is determined by the bias of Q3. Potentiometer R13 is adjusted to obtain 27.5 volts at the test point connected to the emitters of Q5 and Q6.

c. A dc feedback path from the emitter of Q3 to the base of Q2 compensates for temperature variation in these two stages. Capacitor C5 provides high frequency compensation. Additional high frequency compensation is provided by capacitor C7, in parallel with resistor R12 in the collector circuit of Q3, and by capacitor C2 in the collector circuit of Q1. Bias for transistor Q3 is determined by potentiometer R13 and resistor R14. Capacitor C6 prevents feedback of signal frequencies through the dc stabilizing feedback circuit.

d. The input signal required to produce a full scale (10 g^2/cps) indication on the associated meter ranges from 0.1 to 0.5 volt, and is dependent upon the gain or loss of the associated filter, and the bandwidth of the channel. Potentiometer R4 is adjusted to produce a dc output of 20 milliamperes. The load resistance of the amplifier varies from approximately 250 ohms to 2,500 ohms, depending on the operating level and setting of the meter range switch. In order to obtain a constant load current (for a given input voltage) negative current feedback is employed.

e. The Model AMD-11 is essentially the same as the Model AMD-10, but is used for low frequency channel 1 only. The only difference between the AMD-10 and the AMD-11 is the values of capacitors C3, C4, C8 and C10.

3-4. MAGNETIC AMPLIFIER ASSEMBLY CIRCUIT DESCRIPTION (refer to drawing number 32755, figures 3-2 and 3-3)

a. Forty-five magnetic amplifiers (one per channel) are used in the Model ASDE-40 system to provide automatic servo control of the acceleration density. A sample of meter current appearing across the spectrum shaping potentiometer is the input to the magnetic amplifier. The output drives the control lamp of the light dependent resistor (LDR) in the equalizer. A full-wave center-tapped, self-saturating circuit is used.

b. The transformer and diodes CR1 and CR2 (figure 3-2) form a conventional full-wave, center-tapped rectifier circuit. When the gate windings of T1 and T2 in series with CR1 and CR2 present a low impedance, the full output will appear across the load R_L.

c. The cores of T1 and T2 have a nearly rectangular hysteresis characteristic (figure 3-3). Current flows in the gate winding during part of each half cycle of the 800 cps excitation voltage and the flux density rises to B+ max. The core saturates and the gate winding allows the full output to appear across R_L.

d. When a current of such polarity and magnitude is introduced into the control winding to produce a magnetizing force in the control range between -H max and -H min (figure 3-3), a rapid transition from partial desaturation to saturation occurs in the magnetic state of the iron during each positive half cycle of the excitation voltage. The gate winding suddenly drops in impedance as B max is reached, and the full output appears across the load, continuing for the remainder of the cycle (this action is similar to that of a thyratron tube). The time required for the transition to occur is called the firing angle and depends on the value of control current. The average dc current in the load is then a function of the control current.

e. The gain of the amplifier is a function of the number of turns on the control windings and the B-H characteristic of the cores. Since the characteristic is nearly rectangular, a small change in control current produces a large change in load current.

f. The two magnetic cores, with their respective gate windings, are combined into one module. The control winding is wound over both cores. The excitation voltage (50 volts, 800 cps square wave) is obtained from a supply within the Model ASDE-40.

g. The threshold of control is determined by a small potential in series with the control winding. This potential is derived by a bridge circuit connected from the +250 volt supply to the -250 volt supply. Precision resistors R13 and R16 determine the 1/2 milliampere current flow through potentiometer R14 and resistor R15. The polarity of this potential produces saturation in the magnetic cores. The polarity of the current from the meter circuit decreases saturation in the cores. Potentiometer R14 is adjusted so that the magnetic amplifier begins to enter its control region with the desired current level from the meter amplifier. Magnetic amplifier gain is adjustable over a small range by means of potentiometer R12. The forward characteristic of CR4 prevents large signals (from the meter amplifier) from carrying T1 through its entire control characteristic and saturating in the abnormal direction.

h. The magnetic amplifier output current flows through R1, R2, R3, and R7 to the light dependent resistor filament on the LDR assembly card, returning to the center tap of the 800 cps supply via the dynamic range indicator (DRI) amplifier and the 55-volt supply. Potentiometer R1 is adjusted for a quiescent voltage drop of 0.8 +0.05 volt across the LDR lamp. Since the resistance of R1 and R2 is much greater than the lamp resistance, the current through the lamp will essentially be constant during the quiescent or open loop condition. As the lamp ages, its resistance increases, increasing the voltage drop across the lamp with a constant current applied. The life expectancy of the lamp is inversely proportional to the voltage across the lamp. To obtain maximum life expectancy, the lamp voltage is positively limited by the clamp circuit (Q1 and Q2).

i. Diode CR3, with resistors R8, R9, R10, and R11, forms a non-linear, temperature compensated voltage divider. Potentiometer R9 is adjusted so that when the voltage across the LDR lamp reaches 0.85 volt, transistor Q2 will conduct. The positive output from Q2 will cause Q1 to conduct, bypassing magnetic amplifier current to ground, and limiting the voltage applied to the LDR lamp.

j. In manual operation, +6.3 vdc is applied to terminal D of the magnetic amplifier by the mode selector. Transistor Q1 clamps to a low voltage, effectively shorting the magnetic amplifier output and removing voltage from the LDR lamp.

k. Capacitors C1, C2, and C3 determine the time constant of the magnetic amplifier. All other elements in the servo loop have short time constants so that there is only one dominant time constant permitting stable accurate servo control.

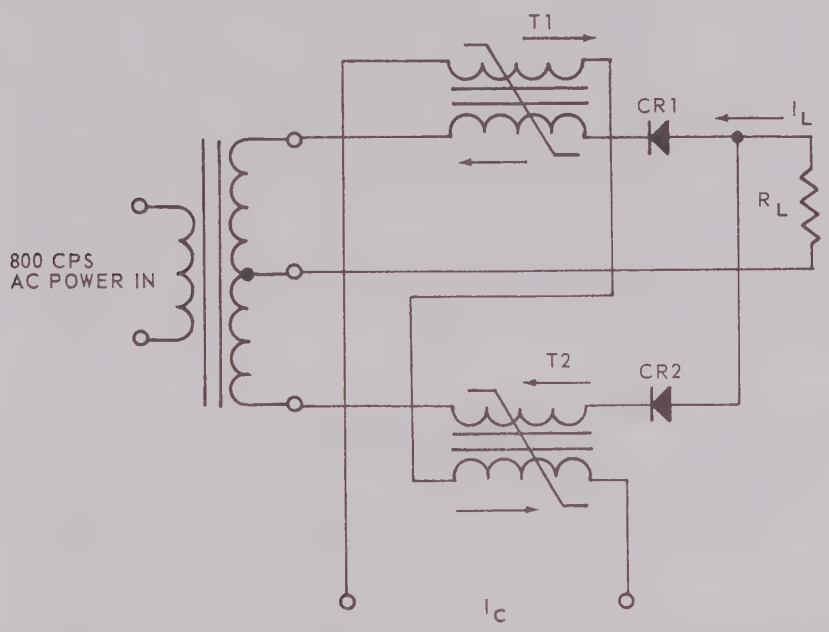

Fig. 3-2 Magnetic Amplifier Assembly, Simplified Schematic

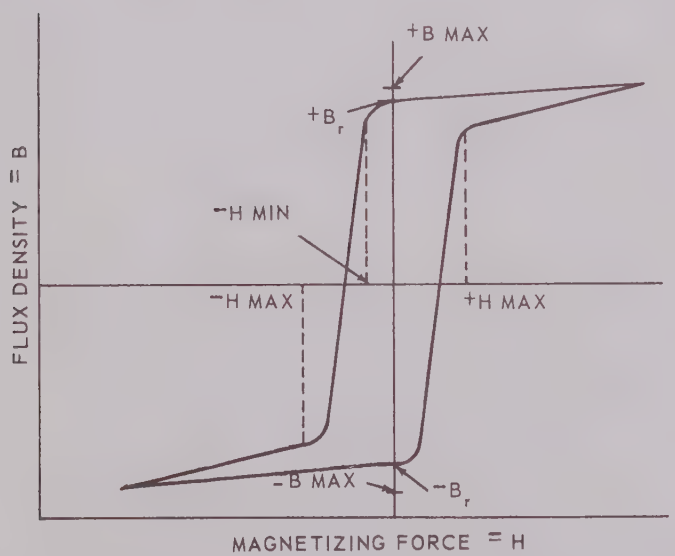

Fig. 3-3 Hysteresis Loop of Magnetic Core Material

3-5. LIGHT DEPENDENT RESISTOR (LDR) ASSEMBLY CIRCUIT DESCRIPTION (refer to drawing number 43647)

a. Each LDR assembly card contains three identical light dependent resistors (LDR) and associated dynamic range indicator (DRI) circuits. Only one will be discussed.

b. The system random noise signal is applied to terminal C from the respective channel equalizer filter. The signal is connected through potentiometer R1 and applied to the resistive element of the light dependent resistor. Potentiometer R1 is adjusted during calibration to correct for differences of insertion loss between filters. From the light dependent resistor, the signal is connected through mixing resistor R3 and applied to the mixing buss on terminal N. The outputs from the mixing resistors of all 45 channels are connected to the mixing buss. The mixing buss is connected to the PA-2 amplifier which has an input impedance of approximately 600 ohms to provide resistance mixing with minimum interaction between channels.

c. In automatic operation, when the photo-resistive element of the LDR has a high value, most of the signal voltage is dropped across the element and little appears across the mixing resistor. When the light dependent resistor has a low value, due to increased lamp current, most of the signal voltage appears across the mixing resistor.

d. A negative voltage from the magnetic amplifier is applied to pin E, one side of the LDR lamp. Current is returned to the magnetic amplifier through two paths. One path is through resistor R5 and potentiometer R6 to the +12-volt power supply. The other return path is through transistor Q2 to the collector, and through resistor R8 to the 55-volt power supply. The clamp circuit on the magnetic amplifier card is connected to the LDR across terminals D and E.

e. In a typical LDR, 12.5 milliamperes of lamp current may result in a resistance value of 10k ohms in the photo-resistive element, while a current of 12.0 milliamperes will give a resistance of greater than 10 megohms. These figures may vary over a wide range from LDR to LDR (11 through 14.5 milliamperes), but will be stable in a given device. The change of lamp current (0.5 milliampere in the example) required to carry the resistive element through its full range (from less than 10k to greater than 10 megohms) is small and normally falls between 0.2 milliampere and 0.7 milliampere. This current is a measure of the compression within the channel, and is amplified to obtain a voltage which drives a dynamic range indicator.

f. For a particular LDR, as in the above example, potentiometer R6 is adjusted so that 9.44 milliamperes flow from the 12 volt supply at minimum compression. The remaining 3.06 milliamperes flow through transistor Q2. 0.2 milliampere flow through resistor R7. 3.26 milliamperes flow through resistor R8 from the 55 volt supply. The voltage drop across resistor R8 is 49 volts, resulting in 6 volts at the collector of transistor Q2. As the light dependent resistor goes through its control region, current through resistors R5 and R6 remains essentially constant because the potential at the emitter of Q2, with respect to the base, remains constant at about -0.27 volt. Changes in LDR current are reflected in the collector circuit of transistor Q2. At maximum compression, the collector current is 2.56 milliamperes with 0.37 milliampere in resistor R7 and 2.93 milliamperes in resistor R8, giving 11 volts at the collector of transistor Q2. This is typical when the light dependent resistor is operating within its dynamic range. When the light dependent resistor is operating outside its dynamic range (at lower or higher values of compression), large current changes in the lamp circuit of the light dependent resistor produce only small changes in compression.

g. The voltage at the collector of transistor Q2 approaches zero volts for zero compression and a maximum value of approximately 18 volts for severe compression. The collector of transistor Q2 is direct coupled to the base of emitter follower transistor Q3. The 18-volt collector supply is derived from the 55-volt supply, and regulated to 18 volts by a zener diode located on the card rack. The output from transistor Q3 is applied to diodes CR4 and CR5. Diode CR4, with respective diodes for each channel, forms an OR gate. The diode in the channel having the least positive voltage at the output of its emitter follower will conduct while all other diodes will be back biased. This voltage is connected to the minimum compression meter in the CP-10A chassis which indicates the value of compression in the channel having the least compression. In a similar manner, diode CR5 and corresponding diodes in the other channels, form an OR gate of opposite polarity to obtain an indication of compression in the channel having the maximum compression on a second meter on the CP-10A.

h. The reference voltages and the sensitivity of the MINIMUM and MAXIMUM meters are selected so that when all channels are within dynamic range, the meters will indicate in the green areas. If any channel drops to zero compression, or climbs to severe compression, the respective meter will indicate in the red zone, warning the operator that the system is operating outside its dynamic range.

i. In the manual mode of operation, the LDR is not used. Relay K1 is energized, bypassing the photo-resistive element, and the lamp is deenergized by the clamp circuit on the magnetic amplifier card. When switching to automatic operation, the mode selector switch removes the 6.3 vdc from transistor Q1 and relay K1 deenergizes within its normal release time (less than 1 millisecond), inserting the photo-resistive element of the LDR. The LDR, deenergized during manual operation, recovers with the time constant of the magnetic amplifier. Diode CR1 prevents transients due to inductive kickback in the relay coil. Diode CR2 is a steering diode.

j. In automatic operation, the full output of the noise generator is applied to the equalizer filters. When switching from automatic to manual, the manual shaping potentiometer is connected into the filter input circuit, and closure of relay K1 (bypassing the LDR) is delayed until the energy stored in the filter has dissipated. The mode selector switch applies 6.3 vdc to terminal F and the emitter of transistor Q1. When power is first applied, capacitor C1 has no charge. Transistor Q1 does not conduct until capacitor C1 charges through resistor R4 and develops sufficient bias. This action delays closure of relay K1 for approximately 150 milliseconds.

3-6. MODEL PA-1 PREAMPLIFIER CIRCUIT DESCRIPTION (refer to drawing number 31156)

a. The Model PA-1 is a low noise, high gain preamplifier consisting of two voltage amplifier stages stabilized by negative feedback. The output is transformer coupled for isolation and impedance matching. The preamplifier accepts the signals from the accelerometer input section of the level control and amplifies them to a level suitable for driving the filter driver power amplifier.

b. The input signal is capacity coupled to the grid of tube V1A. Tubes V1A and V1B are conventional RC coupled triode amplifiers. Negative feedback is taken from the plate of V1B and applied to the cathode of V1A through capacitor C5 and resistor R10. The open loop gain of the amplifier is approximately 1,000, and the net gain, after feedback, is approximately 60.

c. Output transformer T1 has a turns ratio of 9, providing a voltage stepdown to the output. The overall gain of the amplifier, including output transformer, is approximately 7. Resistors R11 and R6, with capacitors C1A, C1B, and C1C provide interstage decoupling of the +250-volt plate voltage. Resistor R12, in series with the filament circuit, reduces tube noise and grid current.

3-7. MODEL PA-2 PREAMPLIFIER CIRCUIT DESCRIPTION (refer to drawing number 31157)

a. The Model PA-2 is a low noise preamplifier consisting of a two-stage voltage amplifier and a cathode follower. The preamplifier accepts the low level signal from the mixing buss of the LDR cards. The output is applied to the Model LA-3 amplifier.

b. Input transformer T1 provides isolation and impedance matching. The turns ratio is approximately 9, providing a voltage gain to the grid of voltage amplifier V1A. The amplified output from V1A is RC coupled to the grid of voltage amplifier V1B. The output from V1B is direct coupled to cathode follower V2.

c. Negative feedback from the cathode of V2 is connected through potentiometer R14 and capacitor C4 to the cathode of V1A. Potentiometer R14 is adjusted for an amplifier gain of approximately 10 from connector P1 to J1. Approximately 60 db of feedback ensures low distortion, low noise, and a low output impedance.

3-8. MODEL LA-3 AMPLIFIER CIRCUIT DESCRIPTION (refer to drawing number 31158)

a. The Model LA-3 is a low noise amplifier consisting of a two-stage voltage amplifier and a cathode follower. The amplifier accepts the output from the PA-2 preamplifier and provides its output signal to the system LEVEL CONTROL.

b. Only one of the input connectors is used. The input transformer turns ratio is approximately 11, providing a voltage gain to the grid of voltage amplifier V1A. The amplifier output from V1A is RC coupled to the grid of voltage amplifier V1B. The output from V1B is direct coupled to cathode follower V2.

c. Negative feedback from the cathode of V2 is connected through potentiometer R6 and capacitor C8 to the cathode of V1A. Potentiometer R6 is adjusted for an amplifier gain of 5 from connector P1 to J1. Approximately 60 db of feedback ensures low distortion, low noise, and a low output impedance.

3-9. MODEL MR-40-1 METER RANGE SWITCH CIRCUIT DESCRIPTION (refer to drawing number 20966)

a. The Model MR-40-1 is comprised of forty identical circuits. The output from the Model AMD-10 meter amplifier is connected through J1. Capacitors C1 and C2 average and filter the positive dc current connected through resistors R1 and R2 to the positive terminal of the meter (P1 or P3). The current is returned to the common side of the averaging capacitors through P2 or P4. The circuit is completed through J3 (to SSM-50A Scanner), and J2 (to CM-40A Mode Selector), and through the negative terminal of J1 to the meter amplifier.

b. The meter movement has a full scale sensitivity of 2 milliamperes corresponding to 0.1 g^2 per cps. For a full-scale sensitivity of 1 g^2 per cps equal to 6.325 milliamperes, S1 connects resistors R1 and R4 across the meter circuit to bypass 4.325 milliamperes. For a full-scale sensitivity of 10 g^2 per cps equal to 20 milliamperes, S1 connects R4 across the meter circuit to bypass 18 milliamperes.

c. In the 10 g^2 per cps position, the impedance of the meter range circuit is approximately 150 ohms. In the 0.1 g^2 per cps position, the impedance of the circuit is approximately 1,500 ohms. The meter amplifier provides constant current drive for a given input. The current is held constant regardless of the position of the range switch.

d. If a large input is applied to the meter amplifier while the meter range switch is in the most sensitive position, the voltage rises from the meter amplifier in order to sustain the current level. The 6-volt zener diode (CR1) shunts the meter range circuit providing a low impedance current path to limit the current in the meter movement and the voltage across C1 and C2.

e. The normal meter averaging time constant is between 3-1/2 seconds and approximately 7 seconds depending on the position of range switch S1. When relay K1 is energized, C2 is removed and the time constant is shortened by a factor of 5. Diode CR2 (connected across the relay coil) prevents switching transients caused by inductive kickback.

3-10. MODEL CM-40A MODE SELECTOR SWITCH AND MODEL SE-40 EQUALIZER ASSEMBLY CIRCUIT DESCRIPTION (refer to drawing number 32782)

a. The Model CM-40A programs the Model ASDE-40 for either manual or automatic operation. Each channel may be switched to either mode independent of any other channel. The Model SE-40 equalizer assembly provides control of the acceleration density in each channel whether in the automatic or manual mode of operation.

b. The mode selector and the spectrum shaping potentiometer are in series with the meter amplifier current loop. Meter current is applied to connector J5 on the mode selector. Connection to the equalizer assembly is made through connectors J7 through J26 for the forty channels. A portion of the meter current, determined by the setting of the spectrum shaping potentiometer, flows to the magnetic amplifier via J1.

c. To establish control at a level of 10 g^2/cps, equal to 20 milliamperes in the meter amplifier output, the spectrum shaping potentiometer is set for a nominal value of 10 ohms (includes the associated resistor R4 in the CM-40A). The voltage drop appearing across the magnetic amplifier input will be 0.2 volt, the nominal threshold of control.

d. When the spectrum shaping potentiometer is adjusted for greater resistance, control is established at lower levels. When set for the maximum value of 1,000 ohms, the potentiometer is paralleled by the input resistance of the magnetic amplifier (1,500 ohms nominal), and the total resistance is approximately 600 ohms. The Model ASDE-40 may be programmed to control the acceleration density from 10 g^2/cps to about 0.005 g^2/cps.

e. In manual operation, section B of the mode selector switch places a short across the input to the magnetic amplifier. No current flows in the control winding of the magnetic amplifier and no control action takes place. Section C of the mode selector switch removes the short across the one megohm manual equalizer potentiometer. The outputs of the Model GRN-200A Dual Noise Generator are fed to the mode selector via J2. Noise generator 1 is connected to the odd numbered channels and noise generator 2 is connected to the even numbered channels. The noise generator signals are connected in series with the one megohm potentiometers. The signals are connected to the equalizer filter bank via J3 and J4. The manual equalizer has a range of control in excess of 60 db.

f. In manual operation, section A of the mode selector switch applies +6.3 vdc to the associated magnetic amplifier card and LDR card via J6. This voltage energizes a dry reed relay on the LDR card to bypass the resistive element of the LDR, and drives the clamp circuit on the magnetic amplifier card to remove the LDR lamp voltage.

3-11. MODEL APS-10A POWER SUPPLY ASSEMBLY CIRCUIT DESCRIPTION (refer to drawing number 31299)

a. The APS-10A consists of three modular power supplies on a single chassis. The Model RPM-400-250 is a positive 250-volt, 400-milliampere regulated power supply. Negative 250 volts at 100 milliamperes is obtained from the Model RPM-100-250 regulated power supply. The Model PS-1130 power supply provides 50 volts, 800 cps, center tapped, square wave excitation for the magnetic amplifiers.

b. Relay K1 is energized by the -250-volt supply and connects primary power to the +250-volt supply. Relay K1 assures that the -250-volt power will be present before the +250-volt power, providing a protective bias interlock for the power tubes used in the GRN-200A.

c. Individual line fuses are provided for each power supply. Open fuses are indicated by lamps in each fuse holder. Resistor R1 is connected across the output of the PS-1130 power supply to provide a static load to improve regulation. The positive and negative 250-volt supplies are adjusted to be within one percent under normal load, preventing unbalanced current from flowing in the magnetic amplifier threshold circuit, and assuring accurate bias for the power amplifier tubes in the noise generator.

d. For further information regarding the individual supplies, refer to the specific manufacturers literature.

3-12. MODEL GRN-200A DUAL NOISE GENERATOR CIRCUIT DESCRIPTION (refer to drawing number 5934)

a. The Model GRN-200A consists of two noise generators and power amplifiers delivering white noise covering the frequency range from 10 cps to 3,000 cps The noise generators and associated amplifiers are identical and only one section will be described.

b. Thyratron tube V1, in a transverse magnetic field, is used to generate a wide-band noise signal. Positive 250 vdc is applied to the noise tube through resistor R1. The noise tube operates in a saturated condition, as a thermally limited diode, so that plate current is a function of the random emission of electrons from the cathode. The noise output is connected to 3,000 cps low-

pass filter FL1 through resistor R2 and capacitor C13. Resistor R2 prevents loading of the noise tube and matches the input impedance of the low-pass filter. The noise generator is enclosed in an aluminum sub-chassis to shield other portions of the circuit against radiation of high frequency noise energy. Supply voltages are connected through feedthrough bypass capacitors.

c. The noise output from the low-pass filter is connected through LEVEL potentiometer R6 to the grid of tube V3. Potentiometer R6 is adjusted to establish the proper output at the power amplifier output connector. Tube V3 is a conventional RC coupled, dual-triode voltage amplifier with a feedback stabilized gain of approximately 200. The output from tube V3 is connected through switch S1 to the grid of tube V4.

d. For operation from an external random signal, switch S1 is set to the DUAL AUX position when two noise sources are used, and to the SINGLE AUX position when only one noise source is used. During absence of plate voltage at V1 and V3 (switch S1 not set to INT. NOISE), relay K1 is deenergized, short circuiting the signal output from tube V3. When switch S1 is set to internal noise, plate voltage is applied to tubes V1 and V3. Transistor Q1 and associated circuitry provide a time delay of approximately eight seconds following the application of plate voltage to allow the operation of the noise tube and preamplifier to stabilize. At the end of the eight second delay period, relay K1 energizes, removing the short circuit from tube V3 and connecting the noise signal to the power amplifier.

e. Diodes CR1 and CR2 with associated bias networks, form a peak clipper to limit the input noise peaks. Diodes CR1 and CR2 are inversely biased with approximately 2.5 volts each from their associated resistor networks (R66, R68, R70, R72) connected across the plus and minus 250-volt supplies. Resistor R65 isolates the clipper from the previous stage.

f. The noise signal is amplified in the pentode section of V4, and direct coupled to the triode section, a split load phase inverter. Resistor R73 and capacitor C16 provide high frequency phase compensation in the amplifier stage. The push-pull output from the triode section is applied through capacitors C17 and C18 to cathode follower V11. The output from cathode follower V11 is direct coupled to push-pull amplifier tubes V5 and V6.

g. Fixed bias from the negative 250-volt supply is applied to tube V11 through resistors R22, R23, R25, and potentiometers R24, and R74. Potentiometer R74 is adjusted to obtain 31 milliamperes plate current from tube V5 and V6. Potentiometer R24 balances the bias applied to the grids of tube V11 through resistors R20 and R21.

h. The noise generator output is taken from terminals 13 and 18 of transformer T1 for application to the equalizer filter bank. The turns ratio of transformer T1 has been selected to provide dynamic plate limiting of the output voltage to protect the filters.

i. Negative feedback from terminal 8 of the output transformer is applied to the cathode of the pentode section of tube V4. Potentiometer R33 is adjusted for balance of gain between the power amplifier for noise generator 1 and the power amplifier for noise generator 2. In the power amplifier circuit for noise generator 2, negative feedback is obtained through a fixed resistor. Output regulation is held to plus or minus 1 db as the output load is varied.

j. Resistors R12, R13, and R40 form a voltage divider and frequency equalizer in the noise output circuit of the GRN-200A. This divider provides a 122 mv signal with an effective bandwidth of 3,000 cps to facilitate a quick check of analyzer calibration.

3-13. RELAY ASSEMBLY CIRCUIT DESCRIPTION (refer to drawing number 32634 and 5934)

a. The lamps in the light dependent resistor assembly are switched off during times when they are not actually used for system control, as during load attachment, manual operation, etc. In this manner, a substantial life expectancy increase is achieved for the lamps. The deenergizing of the LDR lamps is accomplished by removing operating power from the 800 cps power supply in the APS-10A which supplies power for the LDR lamps.

b. On the GRN-200A, when switch S1 is set to STANDBY, +250 volts is applied through resistor R93 and connector J4 to energize relay K3 in the relay assembly. With relay K3 energized, operating power is removed from the 800 cps power supply in the APS-10A.

c. The energy output of the combined noise generator circuits is sampled across resistors R94 and R95 and applied to pin 12 of connector J4 on the noise generator. This output level is applied to the base of transistor Q1 on the relay assembly. When the signal is present, Q1 conducts to energize relay K2, and the system circuitry operates normally. If the noise generator output signal is absent, relay K2 deenergizes, applying power to time delay relay K4. Should the signal continue to be absent for five minutes, relay K4 energizes, energizing relay K1 to remove power from the 800 cps power supply in the APS-10A. Relay K1 remains energized through its own holding contacts. Power is removed from relay K4 and K4 resets. When the signal reappears at the GRN-200A output, Q1 conducts, K2 energizes, and K1 deenergizes, restoring power to the APS-10A.

d. Power for relay chassis operation is obtained through resistor R96 in the GRN-200A, and regulated to -15 volts by zener diode CR1 on the relay assembly.

3-14. MODEL A-10 DRIVER AMPLIFIER CIRCUIT DESCRIPTION (refer to drawing number 42521)

a. The Model A-10 amplifier provides the power required to drive the bank of analyzer filters. This amplifier has a 30-watt power rating. The nominal load presented by the analyzer filter bank is 16 ohms. The 4-ohm output of the amplifier is used to drive the filters. This impedance has been selected to take advantage of dynamic plate limiting to protect the filters.

b. The amplifier is a Bogen Model MO-30 modified as shown in print number 42521 to improve the low frequency response.

3-15. MODEL SSM-50A SCANNER CIRCUIT DESCRIPTION (refer to drawing number 5857)

a. The metering current in each channel is sampled by precision 100-ohm resistors connected in series with the meter circuit. The voltage drop across the resistor, a function of meter current, is continuously averaged by individual RC networks. Two 33k resistors and a 100 mfd capacitor are used for each channel, providing a six second averaging time constant.

b. A rotary stepping switch is used to sequentially select each of the 46 2-wire dc input signals. A variable rate relaxation oscillator circuit and a silicon controlled rectifier drive the stepping switch for automatic scanning. A channel may be manually selected by front panel push-button switches. A differential amplifier accepts the selected signals, and provides an output for the Y axis of an X-Y plotter. A dc voltage proportional to the frequency of each channel is simultaneously provided to drive the X axis to derive a plot of amplitude with respect to frequency on an X-Y plotter.

c. The stepping switch has five electrical poles with two switch decks for each pole. The switch rotates through a full 360 degrees. During half of this rotation, contact is sequentially made to twenty-six positions on one deck while the other deck is open. Contact is made to the twenty-six positions of the other deck during the second half of the rotation to provide 52 electrical positions for each pole.

d. The Model ASDE-40 requires 46 switch positions (45 channels plus above 2 kc). The unused six positions have been connected to adjacent contacts or to ground so that a continuous plot may be obtained without interruption.

e. The stepping switch has two auxiliary sets of contacts. One set of contacts is used as an interrupting relay and actuates on each step. The other set of contacts is not used in the Model SSM-50A.

f. A pulsed voltage of variable repetition rate is developed through unijunction transistor Q1 connected in a relaxation oscillator circuit. Transformer T1 and diode bridge CR1 through CR4 develop a positive 28-volt dc level which is filtered by capacitors C1 and C2 and resistor R1, and connected through resistor R2 to the base 2 of transistor Q1. This voltage is also connected through resistor R3 and potentiometer R102 to capacitor C3. The emitter of transistor Q1 is connected to capacitor C3. When the charge across capacitor C3 reaches the firing point, transistor Q1 conducts, discharging capacitor C3 into resistor R4 and the gate of silicon controlled rectifier SCR1.

g. Conduction through rectifier SCR1 completes the circuit from the negative side of the 28-volt supply, through switch S48, to relay K1. As the stepping switch actuates, its interrupter contacts open the circuit, dropping the current to a low value and stopping conduction through rectifier SCR1. Interrupter operation ensures that only one voltage pulse will be applied to the stepping switch during any one oscillator cycle. Capacitor C3 begins to recharge, and the cycle is repeated. The stepping rate is variable from 1 to 8 steps per second through adjustment of potentiometer R102.

h. Transformer T2 and associated circuitry supplies positive 130-volt dc for the indicator network. The positive voltage is connected through the coil of relay K2 and its shunt resistor R55 to the pole of the C and D decks of relay K1. Neon lamps IS1 through IS47 are connected to separate contacts on these decks and returned to the negative side of the 130-volt supply through resistors R1 through R47. As the switch steps through each position, a lamp indicates which channel has been selected. The lamp current is not great enough to energize relay K2.

i. In manual operation, a channel is selected by pressing one of the front panel switch-lamps (IS1 through IS47). Each switch is connected between one contact of the C or D deck of stepping switch K1, and the negative side of both the 28-volt and 130-volt supply. The pressed switch-lamp completes a circuit for 28-volt dc through its associated diode (CR1 through CR47) and the interrupter contacts of K1, causing the switch to begin stepping. When the channel associated with the pressed switch-lamp is reached, a circuit is completed through the C or D deck of the stepping switch and the coil of relay K2 to the 130-volt supply. Relay K2 energizes, opening the 28-volt circuit, and stopping the stepping switch.

j. Diodes CR1 through CR47 complete the path for 28-volt dc through the interrupter contacts while blocking the 130-volt dc from the C and D decks of the stepping switch. Resistor R49 provides a drain for reverse diode leakage which might otherwise cause more than one lamp to light at one time.

k. Two poles of the stepping switch sequentially select the averaged dc sample for each channel from the filter deck. The signal is applied to the two inputs of a differential amplifier to derive the difference signal while rejecting common mode signals also present in the input.

l. During switching time, the inputs to the differential amplifier are open circuited. The two poles may not be exactly synchronized, so that one input to the amplifier may be connected while the other input is open. To avoid large transients at the output, a commutating capacitor is connected across the differential inputs of the amplifier. The impedance at each input to the amplifier is 1.5 megohms. The capacitor is selected to provide an input time constant that is long compared with the switching interval. Transient signals appear at the amplifier inputs as common mode signals and are rejected in the differential amplifier.

m. The differential amplifier is an operational amplifier connected in a subtractor configuration. The amplifier provides a high degree of accuracy with an open loop gain of 20,000. External feedback circuits are used to derive unity gain from the amplifier. The signal applied to terminal 3 is reversed in phase at output terminal 6. The signal applied to terminal 2 receives no phase inversion through the amplifier and is algebraically added with the signal at input terminal 3.

n. Resistors R104 and R105 provide the unity gain characteristic for the terminal 3 channel. Potentiometer R107 is adjusted so that the ratio of R103:R106 plus R107 is equal to the ratio of R104:R105 so that common mode levels will be equally applied to both input terminals and no output will result.

o. Capacitors C51, C52, C53, and C56, and resistor R110 compensate for stray capacities in the amplifier characteristics to provide good ac common mode rejection. Resistor R109 and capacitor C54 form a low-pass filter to further reduce ac signals appearing in the output.

p. Power for the amplifier is derived from the +250-volt and -250-volt supplies in the Model ASDE-40. Resistors R51 and R52, with diodes CR49 and CR50 provide the plus and minus 15-volt power for the differential amplifier. Resistors R53 and R54, with capacitors C1 and C2 filter high frequency noise in the dc voltages.

q. While one pair of switch decks and the differential amplifier provide a Y axis output, another switch deck provides a dc voltage proportional to the frequency of each channel to drive the X axis. Resistor R48 and diode CR48 derive a 20-volt reference level from the plus 250-volt supply for the series voltage divider resistors R56 through R101. The resistor values are proportional to the bandwidths of their respective channels, providing a dc output that is linear with respect to frequency.

r. In order to obtain a graphic indication of acceleration levels at the various test frequencies plotted as a series of steps, the time constant of one axis must be much longer than the time constant of the other axis. The condition ensures that one axis will reach its final value well before the other axis reaches its final value. Plotter overshoot will appear at the final position on the plot and will not obscure the step. Resistor R50 and capacitor C50 eliminate switching transients and lengthen the time constant in the X axis channel. The time constants of the X and Y axes of the scanner are approximately 30 and 1 milliseconds, respectively. The time constants of external plotting equipment, log converters, etc, when added in the circuitry, will effect the circuit time constants quoted, and must be considered when attempting to derive a plot using an X-Y plotter.

SECTION 4 - TEST AND CALIBRATION

4-1. GENERAL

a. The test and calibration procedure for the Model ASDE-40 is divided into seven basic areas:

(1). Preliminary system tests and adjustments.

(2). Analyzer calibration.

(3). Equalizer calibration.

(4). Magnetic amplifier assembly gain adjustment.

(5). Dynamic range indicator calibration.

(6). Threshold calibration.

(7). Chassis tests and calibration.

b. The procedures in this section are sufficient for periodic maintenance and calibration. It is not usually necessary to perform all operations. It is recommended that calibration be checked during each calibration period (three months or less). Perform the other procedures at yearly intervals or as required by component failure or evidence of malfunction.

c. Many functions of the Model ASDE-40 are integrated and interdependent. Indiscriminate adjustments may necessitate extensive recalibration.

d. Major maintenance or recalibration should be accomplished either under the direct supervision of Ling field representatives or at the factory.

4-2. PRELIMINARY SYSTEM TESTS AND ADJUSTMENTS

a. On the LA-20-05B, set the power supply breaker off and the output voltage select switches as follows:

NOTE

Slide chassis forward to reach these switches.

(1). S1 to 5V.

(2). S2 to 0V.

(3). S3 to 20V.

(4). S4 to 0V.

(5). Vernier to 10.

b. On the PD-10B, set the LINE breaker to ON.

c. On the LA-20-05B, set the Power Supply breaker to ON.

d. Check that the blower starts and that 6.3 vdc is present at the rear of the filament supply.

e. Relay assembly operation.

(1). On the CP-10A, set the LEVEL CONTROL to CAL.

(2). On the GRN-200A, set the function switch to INT. NOISE.

(3). Using an oscilloscope, check the voltage from the M to the F buss and the L to the F buss on the magnetic amplifier assembly cards (figure 4-3). The oscilloscope should indicate 50 volts peak-to-peak, 800 cps square wave for each measurement. If an abnormal indication is obtained, check the PS-1130 supply on the APS-10A, and check interconnecting wiring.

NOTE

The indication on an average responding meter (such as the HP 400-H), calibrated in rms, should be 27.5±1.4 volts for each measurement.

(4). On the GRN-200A, set the function switch to STANDBY. The 50-volt, 800 cps excitation should drop to zero.

(5). Reset the function switch to INT. NOISE. The 50-volt, 800 cps should be present.

(6). Set the function switch to DUAL AUX. The 50-volt, 800 cps should be present and remain for approximately five minutes, then drop to zero. If necessary adjust relay K4 on the relay assembly for a five minute delay.

(7). Reset the function switch to INT. NOISE. The 50-volt, 800 cps should return immediately.

f. On the CM-40A, set the mode selector switches to AUTOMATIC.

g. On the 5LF-40A, set the mode selector switches to AUTO.

h. On the GRN-200A (figures 4-1A and 4-1B), check the filament voltage of the 6D4 tubes (V1 and V2). The voltage must be 6.3 volts (+0, -5)%.

i. Monitor the voltage on the J buss of the AMD-10 cards and adjust the output voltage vernier control on the LA-20-05B for 55 volts ±0.5%.

j. Check for -250 volts and +250 volts ±1% on the H and N buss respectively of the magnetic amplifier assembly cards. If necessary adjust the RPM-100-250 or RPM-400-250 supplies in the APS-10A.

k. To perform the bias adjustments for the GRN-200A, refer to figures 4-1A and 4-1B and proceed as follows:

(1). Set the function switch to STANDBY.

(2). Monitor the plate current from tubes V5 and V6 with a dc clip-on ammeter. Adjust potentiometer R24 for equal plate currents from each tube, and adjust potentiometer R74 for an indication of 31 milliamperes.

(3). Repeat step (2) for tubes V9 and V10. R52 adjusts balance, and R76 adjusts current.

l. Adjust the TS-121R-12 (12-volt supply) for +12 ±0.5 volts on the B buss of the LDR assembly cards. (See NOTE on page 4-5).

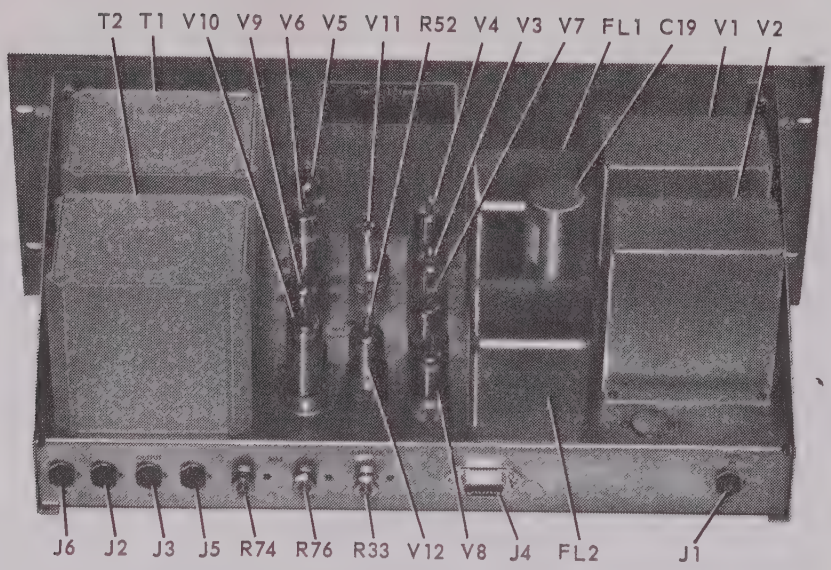

Fig. 4-1A Model GRN-200A Dual Noise Generator, Rear View

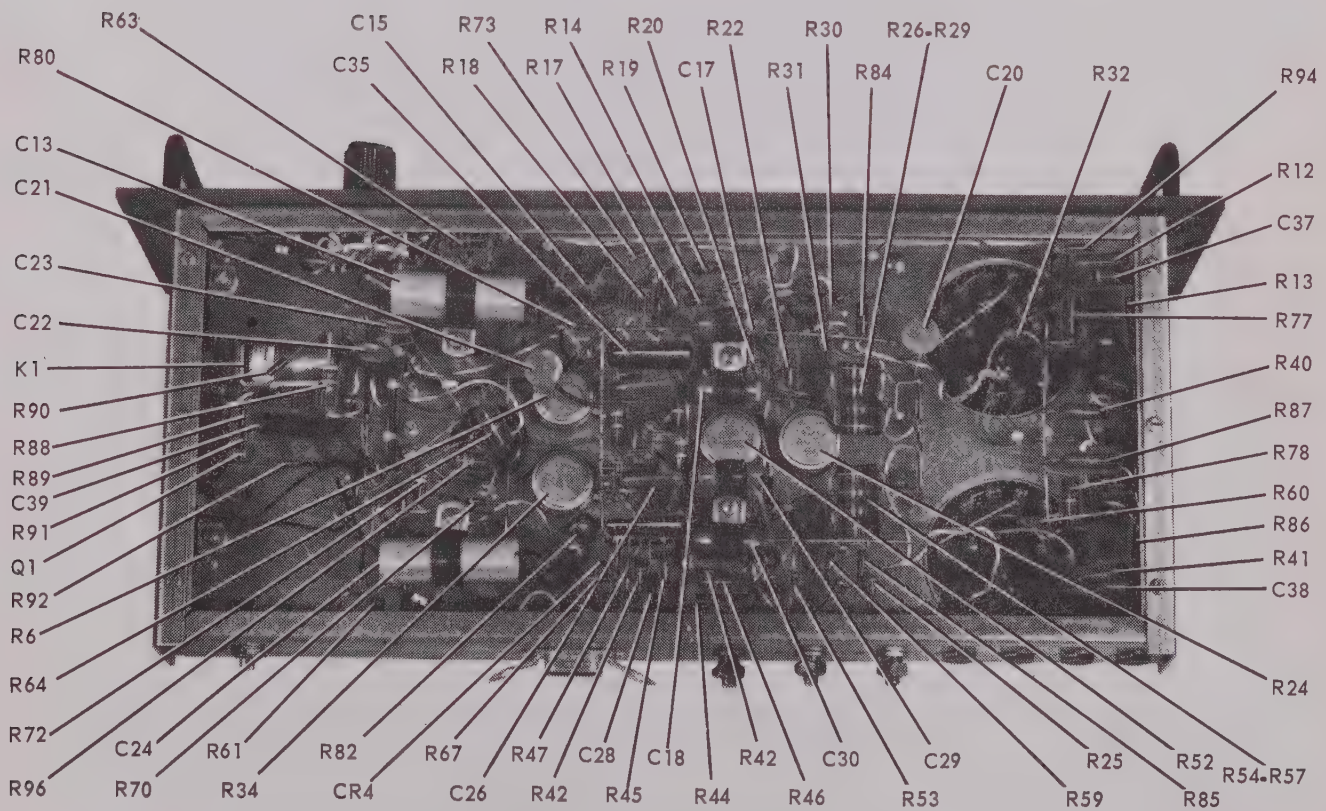

Fig. 4-1B Model GRN-200A Dual Noise Generator, Bottom View

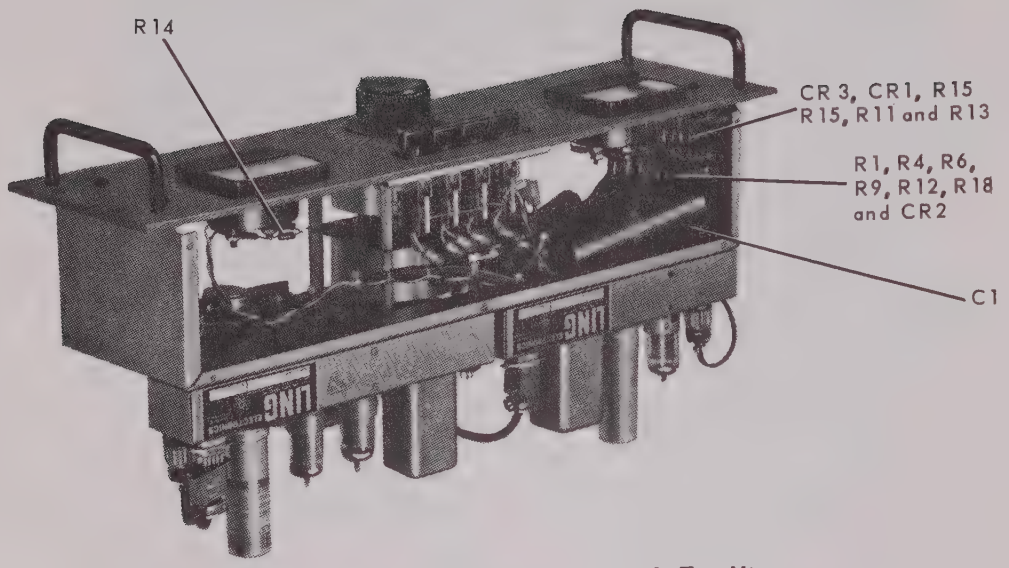

Fig. 4-2A Model CP-10A Control Panel, Top View

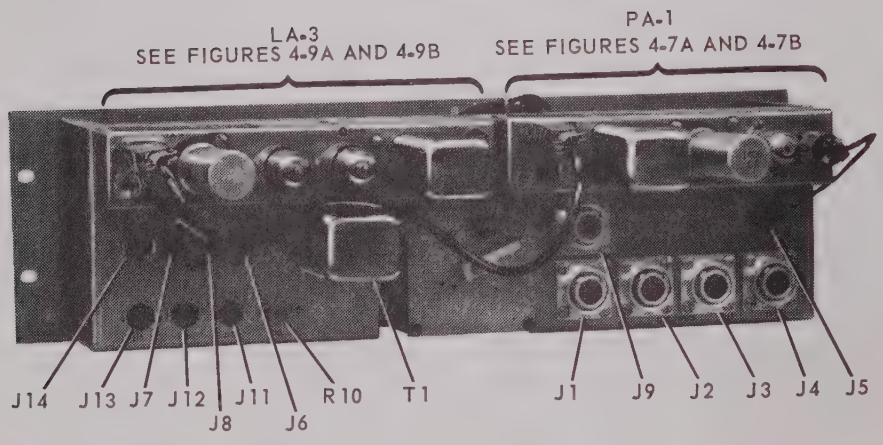

Fig. 4-2B Model CP-10A Control Panel, Rear View

NOTE

Adjustment of the TS-121R-12 affects DRI calibration and should not be touched unless a complete recalibration is intended.

m. Check that +18 +1.8 vdc is present on the P buss of the LDR assembly cards (figure 4-4B). If this voltage is abnormal, check the 18-volt zener diode on the card rack.

n. Short the accelerometer input at the access panel (pin 1 to pin 2 on connector J5).

o. Press the ACCELEROMETER SELECTOR pushbutton number 1 on the CP-10A.

p. On the CM-40A, set the mode selectors to AUTOMATIC.

q. On the 5LF-40A, set the mode selectors to AUTO.

r. On the GRN-200A, set the function switch to SINGLE AUX.

s. Remove relay K2 from the relay assembly.

t. On the CP-10A, set the LEVEL CONTROL to the zero db position.

u. Monitor the LDR lamp filament voltage (channel 1). Connect insulated probes to terminal B(-) and A(+) of the magnetic amplifier receptacle. Use an instrument isolated from chassis ground and the ac line, with an accuracy of ±2% or better at 0.8 volt, and a sensitivity of 10,000 ohms per volt or greater.

CAUTION

USE EXTREME CARE TO AVOID SHORTING TEST PROBES TO OTHER CIRCUITRY. DO NOT APPLY MORE THAN ONE (1) VOLT TO THE LDR LAMP UNDER ANY CIRCUMSTANCES.

v. On the magnetic amplifier assembly card (figure 4-3), adjust potentiometer R1 (channel 1) to increase the voltage drop across the LDR lamp. At 0.85 volts, the LDR lamp voltage should cease to respond to the adjustment due to the action of the voltage clamp. If necessary, adjust potentiometer R9 on the magnetic amplifier assembly to set the voltage clamp to 0.85 volt.

w. On the magnetic amplifier assembly card, readjust potentiometer R1 (channel 1) for a voltage drop of 0.8 ±0.05 volt across the LDR lamp.

x. On the CM-40A, set the associated channel mode selector to MANUAL. The voltage across the LDR lamp should drop to less than 0.2 volt.

y. Repeat steps m through x for the remaining channels.

z. Replace relay K2 in the relay assembly chassis.

4-3. ANALYZER CALIBRATION

a. Test equipment (refer to table 4-1 for standard test equipment).

b. Special equipment.

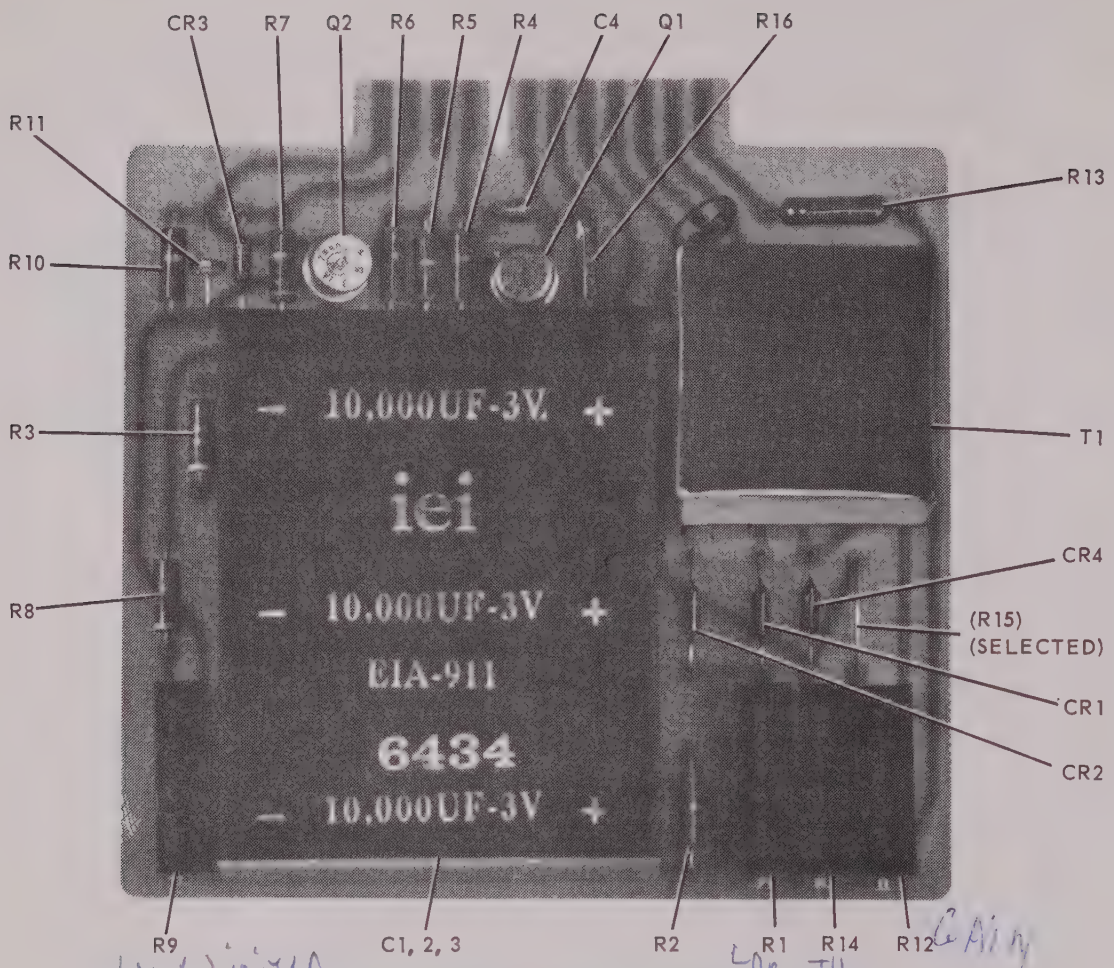

Fig. 4-3 Magnetic Amplifier Assembly

(1). Noise generator with a known flat response (+0.5 db from 10 cps to 10,000 cps, +1 db to 100,000 cps) and with gaussian amplitude distribution from 0 to 3 sigma (General Radio Model 1390B or equivalent).

(2). Amplifier, McIntosh Model MC-30 or MC-75, or equivalent.

(3). True RMS meter with extended time constant (Ling Model VTVM-3).

(4). Low pass filter.

(a). To calibrate the analyzer, it is necessary to have a source of random noise with a flat spectral density (PSD) response, and a known effective noise bandwidth (B_n). The response of the generator may be verified by means of an independent analysis with a wave analyzer. The bandwidth will be defined by using a low-pass filter of known characteristics. LC low-pass filters of conventional design are generally unsatisfactory (or at least ambiguous) since small undulations in the pass band make it difficult to define the effective noise bandwidth (B_n).

(b). It is recommended that a simple RC network be used. The bandwidth (B_n) of a one pole RC network is known to be equal to $\frac{\pi}{2}$ x the cut-off frequency (f_o), where f_o is the frequency at which the network response is down 3 db.

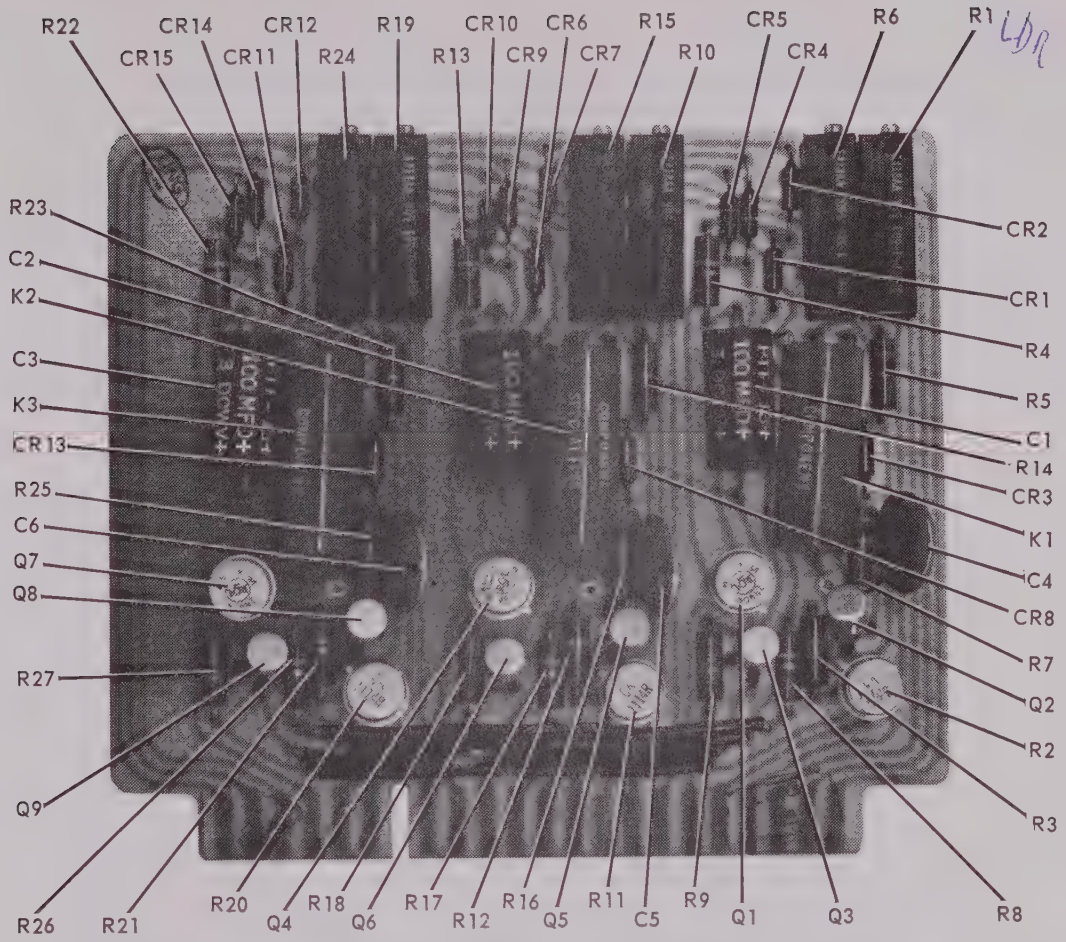

Fig. 4-4A Light Dependent Resistor Assembly

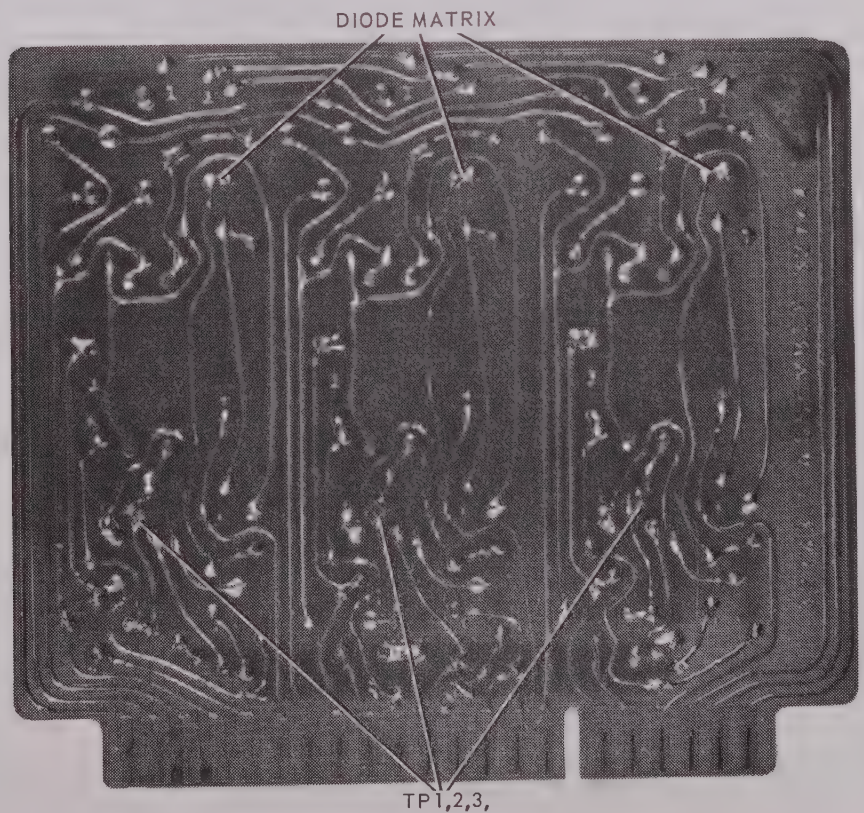

Fig. 4-4B Light Dependent Resistor Assembly, Test Point Locations

$$f_o = \frac{1}{2\pi RC}$$

$$B_n = \frac{\pi f_o}{2} = \frac{1}{4RC}$$

To avoid an error from the rolloff of the RC network, f_o should be selected to be much greater than the center frequency of the highest channel to be calibrated.

(c). For an error of approximately 3%, f_o should be 4 times greater than the highest center frequency of the ASDE-40; that is, f_o should be 8kc or higher. B_n (effective noise bandwidth) will then be 12kc or higher.

(d). Care must be taken to avoid loading the RC network. The network should be followed by an amplifier (MC-30 or MC-75), having a high input impedance. The input capacity of the amplifier is a part of the network. The frequency response of the amplifier must be at least two octaves above B_n. For example:

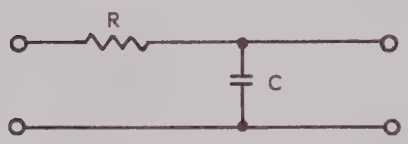

Let B_n = 12 KC

Choose C = 2000 mmf

Then R ≈ 10 K ohm

And f_o = 7638 cps

(e). Use a 6800 ohm carbon resistor in series with the 5k ohm carbon film potentiometer. A silver mica capacitor is recommended.

(f). Align the network by driving it from a sine-wave oscillator having a low source impedance (less than 100 ohms). Connect the network to the amplifier (MC-30 or MC-75). Adjust the 5k ohm potentiometer for a response of -3 db at 7638 cps.

c. Control settings.

(1). On the PD-10B, set the LINE breaker to OFF.

(2). On the MR-40-1, set the meter range switches to 10.

(3). On the SE-40, set all spectrum shaping potentiometers to the up position.

(4). On the CM-40A, set the mode selector switches to MANUAL.

(5). On the CP-10A, press the ACCELEROMETER SELECTOR 1 pushbutton, and set the LEVEL CONTROL to 0.

(6). On the 5LF-40A, set the range switches to 10, mode selectors to MAN, all equalizers to the up position, and the METER DAMPING switch to HIGH.

(7). On the GRN-200A, set the function switch to STANDBY.

(8). Set the test noise generator bandwidth switch to 500 kc, and set the output amplitude to 0 (OFF).

d. Preliminary equipment connections.

(1). Connect a 100-ohm resistor across the output of the test noise generator.

(2). Connect the test noise generator to the low-pass filter.

(3). Connect the low-pass filter to the amplifier (MC-30 or MC-75).

(4). Connect the amplifier to the ACC 1 input on the access panel.

(5). Connect the true rms meter to the ACC 1 input on the access panel.

e. Calibration levels.

Calibration is to be performed at the level of 0.5 g^2/cps. The calibration at 5 and 0.05 g^2/cps will then be checked. Compute the calibration levels:

g rms $= \sqrt{B_n (PSD)}$

For PSD = 5 g^2/cps and B_n = 12 KC,

g rms $= \sqrt{12000(5)} = 245$ (approximately)

Input accelerometer sensitivity = 10 mv/g.

E_{cal} = 2.45 volts (approximately)

For PSD = 0.5 g^2/cps, E_{cal} shall equal 0.775 volts.

For PSD = 0.05 g^2/cps, E_{cal} shall equal 0.245 volts.

f. Preliminary settings and connections for calibration.

(1). On the PD-10B, set the LINE breaker to ON and allow 30 minutes for warmup.

(2). Using a dc voltmeter, measure the voltage from the test point on the AMD-10 meter amplifier circuit card (figure 4-5) to ground. Adjust potentiometer R13 for an indication of 27.5 $\pm$2.5 volts. Repeat for each card.

(3). On the MR-40-1, set the range switches to 10.

(4). Adjust the test noise generator for 2.45 volts at ACC 1.

(5). Monitor the output from all analyzer filters to determine the filter with the highest gain.

NOTE

Normally filters 12 through 16 have the highest gain.

(6). Adjust the volume control on the A-10 amplifier for 0.35 volt at the output of the analyzer filter having the greatest gain.

(7). Check the output of analyzer filter number 1. If necessary, readjust the A-10 volume control so that the output of filter number 1 is at least 0.1 volt rms, and the output of the highest filter is not greater than 0.5 volt rms.

(8). Decrease the test noise generator output to 0.775 volt at the ACC 1 input.

(9). On the MR-40-1, set the range switches to 1.0.

(10). A meter indication of 0.5 $\pm$0.06 g^2/cps is desired on the SA-40B. Allow adequate meter averaging time. If only minor adjustments are required, adjust potentiometer R4 on the AMD-10 meter amplifier circuit card.

(11). Should many channels require adjustment, it is helpful to utilize the scanner and an X-Y plotter. By making several plots, the average value of each channel can be more readily determined. The plot also serves as a record of the previous indication which may be compared against a new indication obtained after adjusting potentiometer R4. In this manner, it is possible to proceed from channel to channel without waiting for the indications to average. A new plot will show the results of readjustments. There may be errors in the scanner output when compared with the associated meter indication. Meter calibration is of primary concern. The scanner output should be compared to the meter indication for each channel. Should indications disagree by more than 5%, troubleshoot the scanner circuit for the error.

(12). Check the calibration at 5 g^2/cps and 0.05 g^2/cps using the appropriate input levels. (steps (3) through (10)).

NOTE

Adjust the meter range switch to the higher range before increasing the input voltage.

g. Above 2 kc meter calibration.

(1). Connect a sine wave oscillator to ACC 1 input on the access panel. Set the oscillator for an output of 3,000 cps at 100 millivolts rms.

(2). On the AMD-10 card for channel 46, adjust potentiometer R4 for a full scale indication on the ABOVE 2 KC meter on the 5LF-40A.

h. Rough calibration check.

(1). In some situations, an exacting calibration as described in the preceding paragraphs may not be necessary. It may be desired to make a rough calibration check for which the calibration signals generated within the ASDE-40 may be used. The accuracy of these signals is on the order of $\pm$1 db.

(2). The internal calibration signal is derived from the GRN-200A Dual Noise Generator. The bandwidth, determined by the low pass filters and equalization network, is 3,000 cps.

(3). These signals, appearing on the access panel at J13 and J12, may be substituted for the external noise signal (paragraph 4-3b).

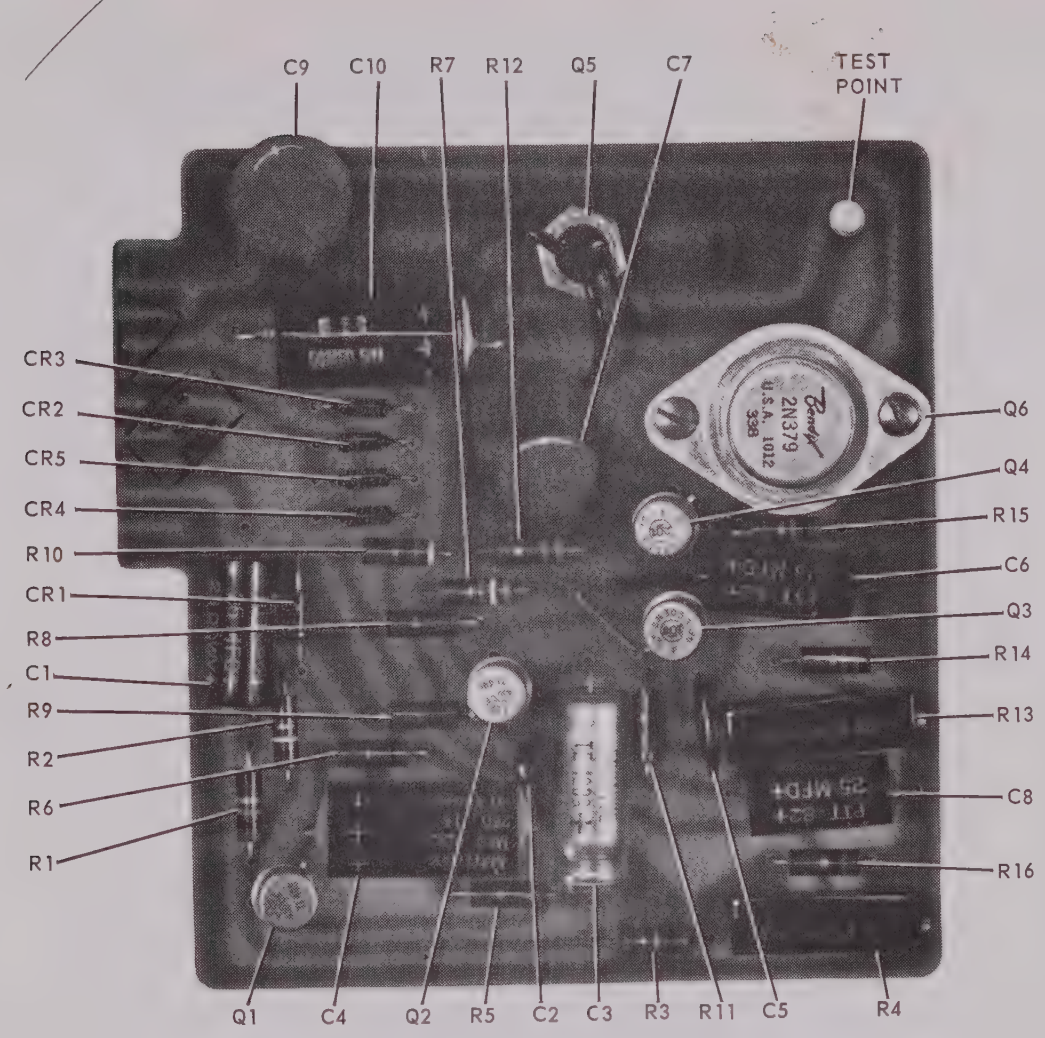

Fig. 4-5 Model AMD-10 Meter Amplifier

(4). For a bandwidth of 3,000 cps and calibration at 0.05 g^2/cps:

$$g_{rms} = \sqrt{3000\ (0.05)} = 12.2\ g_{rms}$$

$$E_{cal} = 122\ mv.$$

(5). The output circuit of the GRN-200A includes a resistance divider that provides the 122 millivolt calibration signal when the full output of the GRN-200A is set for approximately 9 volts. This is the normal output as prescribed in paragraph 4-4b(9).

(6). When using the internal calibration signals provided in the Model ASDE-40, check the voltage at the accelerometer input connector with the true RMS meter and readjust if necessary.

NOTE

Take care that the instrument used indicates the actual signal appearing at the accelerometer connector on the access panel. Due to the low level involved, a few millivolts induced in interconnecting wiring will cause an error.

(7). Calibration at 0.5 g^2/cps and 5 g^2/cps may be accomplished by adjusting the LEVEL CONTROL on the CP-10A to the 10 db and 20 db positions respectively. Calibration at 0.05 g^2/cps is made with the LEVEL CONTROL set to 0 db.

4-4. EQUALIZER CALIBRATION

a. Test equipment.

(1). Refer to table 4-1 for a list of standard test equipment required.

(2). A true RMS meter with an extended time constant will be required as special test equipment (Ling Model VTVM-3).

NOTE

Before performing this calibration procedure, check the calibration of the Model PA-2 and LA-3 amplifiers.

b. Preliminary settings and connections.

(1). On the CM-40A and 5LF-40A, set the mode selector switches to MANUAL.

(2). On the CP-10A, set the LEVEL CONTROL to 0.

(3). On the PD-10B, set the LINE breaker to ON.

(4). On the GRN-200A, set the function switch to SINGLE AUX.

(5). Connect an oscillator to AUX IN connector J9, pins 1 and 2, on the access panel. Set the oscillator output to zero.

(6). Connect an AC VTVM to the output of noise generator 2 (T2, GRN-200A).

(7). Set the oscillator for an output frequency of 500 cps. Increase the oscillator output level to obtain a 1-volt output from noise generator 2.

(8). Connect the AC VTVM to the output of noise generator 1 (T1, GRN-200A).

(9). On the GRN-200A, proceed as follows:

(a). Adjust potentiometer R33 to obtain a 1-volt output from noise generator 1 (same as measured in 4-4b(7)).

(b). Set the function switch to INT. NOISE.

(c). Adjust potentiometer R6 to obtain 122 millivolts between pins 1 and 2 of CALIB SIGNAL connector J13 on the access panel.

(d). Adjust potentiometer R34 to obtain 122 millivolts between pins 4 and 5 of CALIB SIGNAL connector J13 on the access panel.

NOTE

The full output from the Model GRN-200A should fall between 8.7 and 9.3 volts across T1 and across T2.

(10). Connect the true RMS meter to the test point (TP1) on the LDR assembly card (channel 1, figure 4-4b).

(11). Connect an AC VTVM to the SYSTEM OUT connector J10 on the access panel.

c. Calibration.

(1). On the LDR assembly card, adjust potentiometer R1 (channel 1) for 0.1 +0.01 volt rms random noise at the test point on the LDR assembly cards.

(2). On the GRN-200A, set the function switch to DUAL AUX.

(3). Adjust the oscillator for 0.15 volt at 15 cps at AUX IN connector J9 on the access panel.

(4). Vary the oscillator frequency until the AC VTVM (at the system output) indicates a peak. The output for channel 1 should peak at approximately 15 cps. The level of the peak will be the reference level for all other channels. Record this reference level.

(5). Increase the oscillator frequency until the output from channel 3 peaks.

(6). On the LDR assembly card, adjust potentiometer R19 (channel 3) to the reference level.

(7). Repeat steps (5) and (6) for all remaining odd channels. The peak response should occur between the frequency limits of the channel.

NOTE

There are three channels on each LDR assembly card (figures 4-4A and 4-4B) with two potentiometers for each channel. The 50K potentiometers (R1, R10, R19) are in the equalizer circuit and the 500-ohm potentiometers (R6, R15, R24) are in the DRI circuit of the Model ASDE-40. Figure 4-6 will be an aid in determining the correct potentiometer for each channel.

(8). Move the oscillator to pins 4 and 5 of connector J9 on the access panel.

(9). Decrease the oscillator frequency to 25 cps.

(10). Increase the frequency until a peak is observed on the AC VTVM. The peak frequency for channel 2 should be between the peak frequencies for channels 1 and 3.

(11). On the LDR assembly card for channel 2, adjust potentiometer R10 for an amplitude equal to the reference level.

(12). Repeat steps (10) and (11) for all even channels. Peak response should fall between the individual frequency limits of each channel.

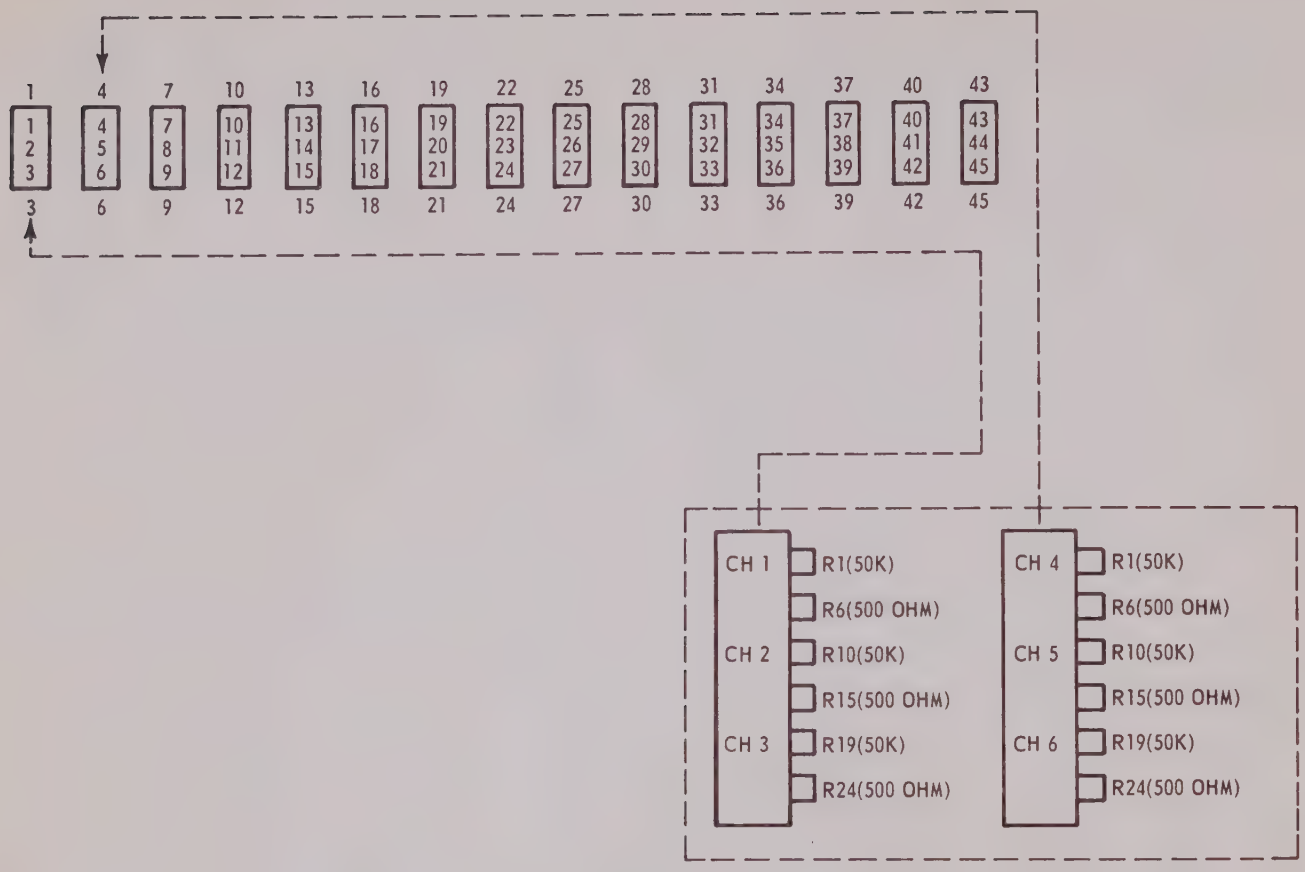

Fig. 4-6 Light Dependent Resistor Assembly (LDR), Channel Location

d. System output settings.

(1). On the GRN-200A, set the function switch to INT. NOISE.

(2). Connect the true RMS meter to the SYSTEM OUT connector J10 on the access panel.

(3). Set the gain control on the Model LA-3 amplifier for an output of 2 volts rms on the true RMS meter.

4-5. MAGNETIC AMPLIFIER ASSEMBLY GAIN CALIBRATION (refer to figure 4-3)

a. Test equipment.

(1). Refer to table 4-1 for standard test equipment required.

(2). True RMS meter with extended time constant (VTVM-3).

b. Preliminary settings and connections.

(1). On the CP-10A, set the LEVEL CONTROL to CAL.

(2). On the MR-40-1, set the meter range switches to 10.

(3). On the CM-40A, set the mode selectors to MANUAL.

(4). On the SE-40, set all spectrum shaping potentiometers fully down.

(5). On the GRN-200A, set the function switch to SINGLE AUX.

(6). On the 5LF-40A, set the mode selectors to MAN, set all equalizers down, range switches to 10, and set METER DAMPING to LOW.

(7). Connect the oscillator to AUX IN connector J9 (pins 1 and 2) on the access panel.

(8). Connect the AC VTVM across the oscillator output.

(9). Connect the oscilloscope and true RMS meter to monitor the output of analyzer filter number 1.

(10). Remove relay K2 from the relay assembly.

NOTE

Steps n through x of paragraph 4-2, preliminary system tests and adjustments, must be performed before attempting this procedure.

c. Adjustments.

(1). On the PD-10B, set the main LINE breaker on.

(2). Adjust the oscillator to the center frequency of channel 1.

(3). On the 5LF-40A, set the equalizer for channel 1 full up.

(4). Increase the oscillator output for a full scale (10 g^2/cps) indication on the meter for channel 1.

(5). Vary the oscillator frequency for a peak indication on the true RMS meter.

(6). Readjust the oscillator output voltage to obtain a full scale indication on the meter for channel 1.

(7). Observe the indication on the AC VTVM (oscillator output) in terms of db.

(8). On the 5LF-40A, set the mode selector for channel 1 to AUTO.

(9). Increase the oscillator output by 10 db.

(10). Check stability by adjusting the equalizer for channel 1 from the top to the lower one third of its adjustment range while observing the oscilloscope. Set the equalizer to the least stable position. The amplitude should decrease rapidly and should not oscillate. If oscillation is observed, adjust potentiometer R12 on the magnetic amplifier counterclockwise to decrease gain.

NOTE

Do not confuse oscillation with a beat frequency between the signal, 60 cps and harmonics or 800 cps and harmonics. Rock the oscillator frequency about the peak response of the channel. If the circuit is truly unstable, the oscillation frequency will not change.

(11). Set the equalizer for channel 1 fully down.

(12). Record the true RMS meter indication in terms of db.

(13). Decrease the oscillator output by 25 db and observe the true RMS meter. The new indication should be within 0.5 db of the indication recorded in step (12).

(14). Decrease the oscillator output by an additional 15 db.

(15). Observe the indication of the true RMS meter. The new indication must be within 1 db of the indication recorded in step (12).

(16). If the control accuracies specified in steps (13) or (15) are not obtained, on the channel magnetic amplifier adjust potentiometer R12 clockwise to increase gain. In some cases it may be necessary to adjust potentiometer R1 on the magnetic amplifier for a slightly higher LDR lamp voltage (paragraph 4-2w) to obtain adequate control accuracy.

(17). On the 5LF-40A, reset the mode selector for channel 1 to MAN.

(18). Repeat steps (2) through (17) for the remaining channels.

NOTE

If a substantial adjustment of potentiometer R12 (3 turns or more) has been required for any channel, the threshold calibration should be checked (paragraph 4-7).

(19). Replace relay K2 in the relay assembly.

4-6. DYNAMIC RANGE INDICATOR CALIBRATION

a. Test equipment.

(1). Standard test equipment is listed in table 4-1.

(2). The DC VTVM, Hewlett-Packard Model 412 is required as special test equipment.

b. Preliminary settings.

(1). On the CP-10A, set the LEVEL CONTROL to CAL.

(2). On the CM-40A, set the mode selectors to MANUAL.

(3). On the MR-40-1, set the meter range switches to 10.

(4). On the SE-40, set all spectrum shaping potentiometers fully down.

(5). On the 5LF-40A, set the range switches to 10, all equalizers fully down, mode selectors to MAN., and METER DAMPING to LOW.

c. Adjustments.

(1). On the SE-40, set the spectrum shaping potentiometer for channel 25 fully up.

NOTE

Channel 25 is selected only as representative. If desired, any other channel may be chosen.

(2). On the GRN-200A, set the function switch to INT. NOISE.

(3). On the rear of the CP-10A, adjust potentiometer R10 for a full scale indication on the SA-40B meter for channel 25 (10 g^2/cps).

(4). On the SE-40, adjust the spectrum shaping potentiometer for channel 25 for an indication of 1 g^2/cps on the associated meter.

(5). On the rear of the CP-10A, readjust potentiometer R10 for a full scale meter indication.

(6). On the CM-40A, set the mode selector for channel 25 to AUTOMATIC.

(7). On the SE-40, set all spectrum shaping potentiometers full up. All meters should indicate approximately 10 g^2/cps.

NOTE

Indications between 8 and 12 are acceptable (12 is the "just pinned" meter position). Should any meter indicate higher or lower, make a preliminary threshold calibration (paragraph 4-7).

(8). With the DC VTVM, check the DRI voltage for each channel at the junction of the emitter of Q3 through Q7 and the diode matrix (figure 4-4B). Readjust the DRI potentiometer on the LDR assembly card associated with each channel for an average indication of 6 volts on the DC VTVM.

NOTE

If a substantial adjustment (3 turns or more) is required, check the LDR voltage (steps n through x of paragraph 4-2).

(9). On the CP-10A, the MINIMUM meter should indicate in the green area.

(10). Momentarily short circuit the output terminal of any equalizer filter. The MINIMUM meter should indicate beyond full scale.

(11). On the SE-40, set all spectrum shaping potentiometers fully down.

(12). On the MR-40-1, set the meter range selector to 0.1.

(13). On the SE-40, set all spectrum shaping potentiometers for associated meter indications of 0.01 g^2/cps.

(14). On the CP-10A, the MAXIMUM meter should indicate in the green area.

(15). On the SE-40, set one spectrum shaping potentiometer fully up. The MAXIMUM meter should indicate beyond full scale.

4-7. THRESHOLD CALIBRATION (refer to figure 4-3)

NOTE

Check the analyzer calibration (paragraph 4-3) before attempting this procedure.

a. Preliminary settings.

(1). On the CP-10A, set the LEVEL CONTROL to CAL.

(2). On the MR-40-1, set the meter range switches to 10.

(3). On the CM-40A, set the mode selectors to AUTOMATIC.

(4). On the SE-40, set all spectrum shaping potentiometers fully up.

(5). On the 5LF-40A, set the mode selector to AUTO, all equalizers up, range switches to 10, and METER DAMPING to HIGH.

(6). On the GRN-200A, set the function switch to INT. NOISE.

b. Adjustments.

(1). On the PD-10B, set the LINE breaker to ON.

(2). Observe the meter indications, and select a meter which indicates the approximate average of all meter indications.

(3). On the magnetic amplifier assembly card for the channel selected in step (2), adjust potentiometer R14 for a full scale (10 g^2/cps) meter indication.

(4). On the SE-40, set all spectrum shaping potentiometers fully down.

(5). On the MR-40-1, set all meter range switches to 1.0.

(6). On the SE-40, adjust the spectrum shaping potentiometer for the channel selected in step (2) to obtain a meter indication of 0.5 g^2/cps.

(7). Using a straight edge, adjust all spectrum shaping potentiometers for the same physical position as in step (6).

(8). Allow adequate time for the meter indications to average. An indication of 0.5 g^2/cps $\pm$1 db is desired on each meter. If only minor adjustments are required, adjust R14 on the associated magnetic amplifier assembly cards.

(9). Should many channels require adjustment, it is helpful to use the scanner and an X-Y plotter. By making several plots, the average indication of each channel can be more readily determined. The plot also serves as a record of previous indications which can be compared against new indications obtained after adjusting R14. In this manner, it is possible to proceed from channel to channel without waiting for the indications to average.

NOTE

There are possible errors in the scanner output relative to the meter indications. The meter calibration is of primary concern. Compare the scanner output to the meter indication for each channel. Should indications disagree by more than five percent, troubleshoot the scanner circuit for the error.

(10). On the SE-40, set all spectrum shaping potentiometers fully down.

(11). On the MR-40-1, set all meter range switches to 0.1.

(12). Check that the meters indicate less than 0.005 g^2/cps.

(13). On the MR-40-1, set all meter range switches to 10.

(14). On the SE-40, set all spectrum shaping potentiometers fully up. Meters should indicate approximately 10 g^2/cps (from 8 to 12 g^2/cps is acceptable).

(15). It may be necessary to repeat this procedure several times, selecting a different channel in paragraph b(2) in order to meet the requirements of paragraphs b(12) and b(14).

4-8. CHASSIS CALIBRATION PROCEDURES

a. Model PA-1 Preamplifier. (refer to figures 4-7A, 4-7B and drawing 31156)

(1). Test equipment.

(a). Refer to table 4-1 for standard test equipment required.

(b). 510-ohm, 1/2-watt resistor.

(c). 6.3 vdc, 1 ampere filament supply.

(2). Preliminary equipment connections.

(a). Connect the oscillator to P1-B (high) or P1-D (low).

(b). Connect the 510-ohm, 1/2-watt resistor across J1-B and J1-D.

(c). Connect the (+) side of a 250 volt supply to P2-9, and the (-) side to P2-8.

(d). Connect the 6.3 vdc, 1 ampere filament supply to P2-7 (+) and P2-6 (-).

(e). Connect the (-) side of the filament supply and the (-) side of the 250 volt supply to the chassis.

(3). Gain.

(a). Apply 0.07 volt at 1 KC to the input of P1-B and P1-D.

(b). The output at J1-B and J1-D should be 0.5 volt ±10%.

(4). Distortion.

(a). Connect the distortion analyzer to the output at J1-B and J1-D.

(b). Apply 0.07 volt from 10 cps to 10,000 cps. Distortion over this range should be less than 0.35%.

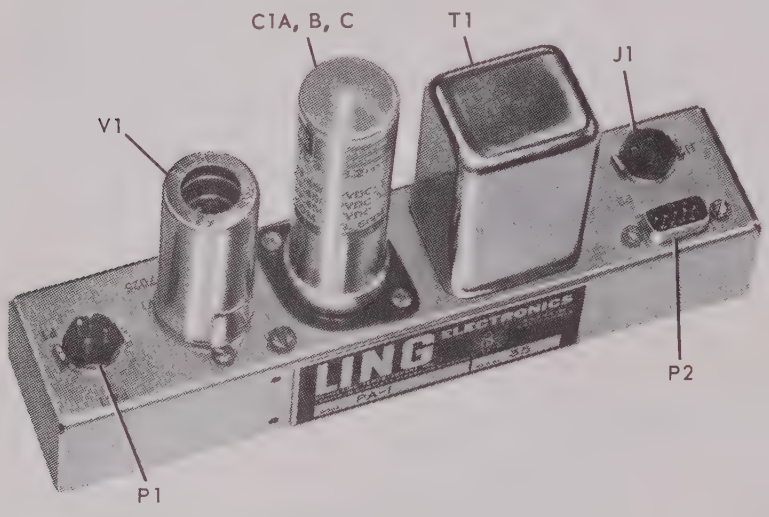

Fig. 4-7A Model PA-1 Preamplifier, Top View

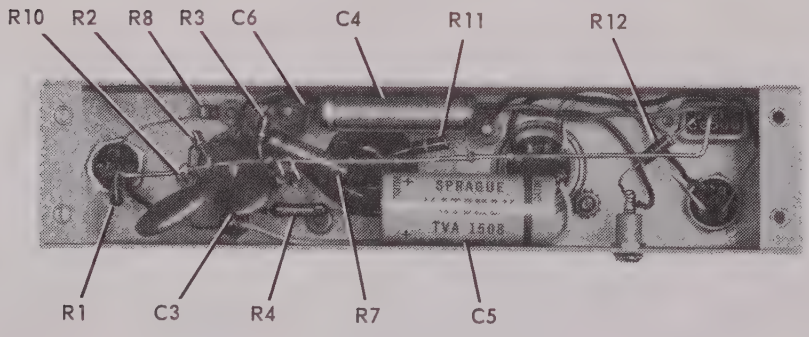

Fig. 4-7B Model PA-1 Preamplifier, Bottom View

(5). Frequency response.

(a). With an input of 0.07 volt, vary the frequency from 10 cps to 2,000 cps.

(b). The output should have a total variance of not more than 0.5 db.

(6). Noise.

(a). Short the input by connecting P1-B to P1-D.

(b). Hum and noise at the output should be at least 70 db below 1 volt.

b. PA-2 Preamplifier. (refer to figures 4-8A, 4-8B, and drawing 31157)

(1). Test equipment.

(a). Refer to table 4-1 for standard test equipment required.

(b). 270-ohm, 1-watt resistor.

(c). 6.3 vdc, 1-ampere filament supply.

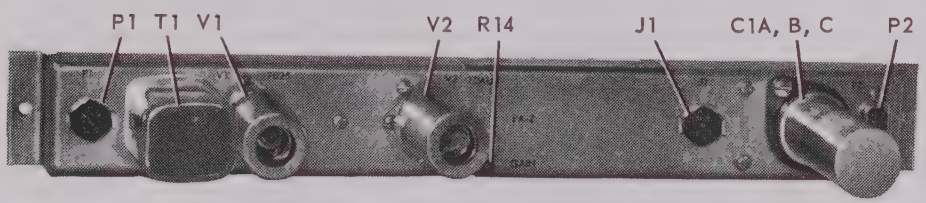

Fig. 4-8A Model PA-2 Preamplifier, Top View

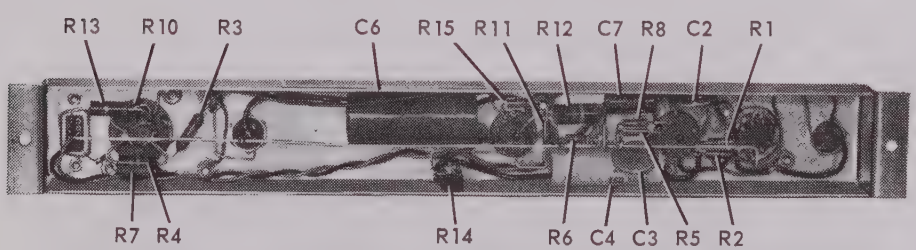

Fig. 4-8B Model PA-2 Preamplifier, Bottom View

(2). Preliminary equipment connections.

(a). Set R14 to approximately midrange.

(b). Connect the oscillator to P1-B (high) and P1-D (low).

(c). Connect the 270-ohm, 1-watt resistor across J1-B and J1-D.

(d). Connect the (+) side of a 250-volt supply to P2-9, and the (-) side to P2-8.

(e). Connect the 6.3 vdc, 1-ampere filament supply to P2-7 (+) and P2-6 (-).

(f). Connect the (-) side of the filament supply and the (-) side of the 250-volt supply to the chassis.

(3). Gain.

(a). Apply 6.3 vdc filament voltage and B+ (250 volts).

(b). Apply 0.08-volt rms (at 500 cps). Adjust R14 for 0.8-volt rms out at J1-B and J1-D.

(4). Distortion.

(a). With an input of 0.08-volt rms, measure the distortion at 5 cps, 10 cps, 100 cps, 1,000 cps, and 3,000 cps.

(b). The distortion should be less than 0.5% from 10 cps to 3,000 cps and less than 1% at 5 cps.

(5). Frequency response.

(a). Apply 0.08-volt rms at 500 cps.

(b). Observe the frequency response (at the output) from 5 cps to 100,000 cps. The response from 10 cycles to 2,000 cps should be flat ±0.25 db.

(6). Noise.

(a). Short P1-B and P1-D to ground.

(b). Measure the hum and noise at J1-B and J1-D. Hum and noise should be better than 80 db below 1 volt.

c. LA-3 Amplifier. (refer to figures 4-9A, 4-9B, and drawing 31158)

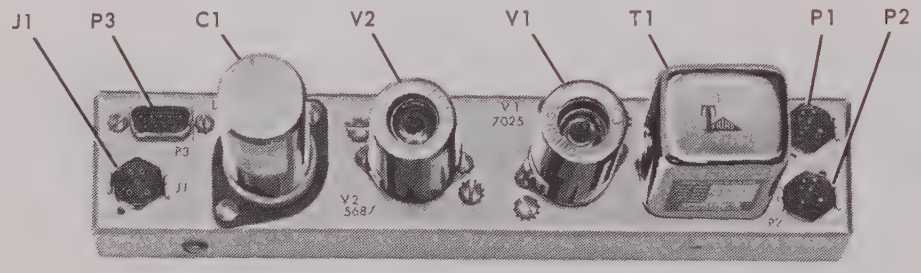

Fig. 4-9A Model LA-3 Amplifier, Top View

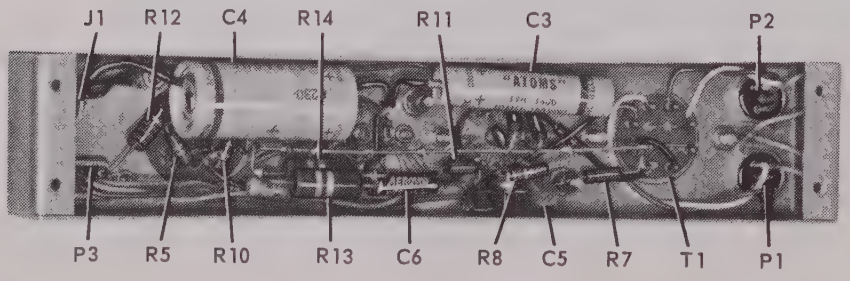

Fig. 4-9B Model LA-3 Amplifier, Bottom View

(1). Test equipment.

(a) Refer to table 4-1 for standard test equipment required.

(b). 620-ohm, 1-watt resistor.

(c). 6.3 vdc, 1-ampere filament supply.

(d). 100-ohm, 1/2-watt resistor.

(2). Preliminary equipment connections.

(a). Connect the oscillator to P1-B (high) and P1-D (low).

(b). Connect the 100-ohm resistor across the output of the oscillator.

(c). Connect the 620-ohm, 1-watt resistor across J1-B and J1-D.

(d). Connect the (+) side of a 250-volt supply to P2-9, and the (-) side to P2-8.

(e). Connect the 6.3-volt, 1-ampere filament supply to P2-7 (+) and P2-6 (-).

(f). Connect the (-) side of the filament supply and the (-) side of the 250-volt supply to the chassis.

(3). Gain.

(a). Apply 6.3 vdc filament voltage and B+ (250 volts).

(b). Apply 0.2-volt rms at 400 cps.

(c). Adjust R6 for 1-volt rms at the output of J1-B and J1-D.

(4). Distortion.

(a). With an input of 0.2-volt rms, measure the distortion at 5 cps, 10 cps, 100 cps, 500 cps, 3,000 cps and 10,000 cps.

(b). The distortion should be less than 0.5% from 100 cps to 10,000 cps, less than 1% at 10 cps and less than 3% at 5 cps.

(5). Frequency response.

(a). Apply 0.2-volts rms to P1-B and P1-D at 500 cps. Observe the frequency response at J1-B and J1-D from 5 cps to 100,000 cps.

(b). The response should be flat +0.5 db from 10 cycles to 2,000 cps and $\pm$1 db from 2,000 to 10,000 cps.

(c). Connect the input to P2-B and P2-D. The output should be the same as P1-B and P1-D.

(6). Noise.

(a). Short P1-B, P1-D, P2-B, and P2-D to ground.

(b). Measure the hum and noise at J1-B and J1-D. Hum and noise should be better than -80 db below 1 volt.

d. 5LF-40A Low Frequency Equalizer. (refer to figure 4-10 and drawing 42281)

(1). Test equipment.

(a). Refer to table 4-1 for standard test equipment required.

(b). DC current source with 1% accuracy.

(2). Preliminary connections.

Connect the dc current source to J1-1 (+) and J6-1 (-).

(3). Calibration.

(a). Apply power (2 milliamperes) to J1-1 and J6-1.

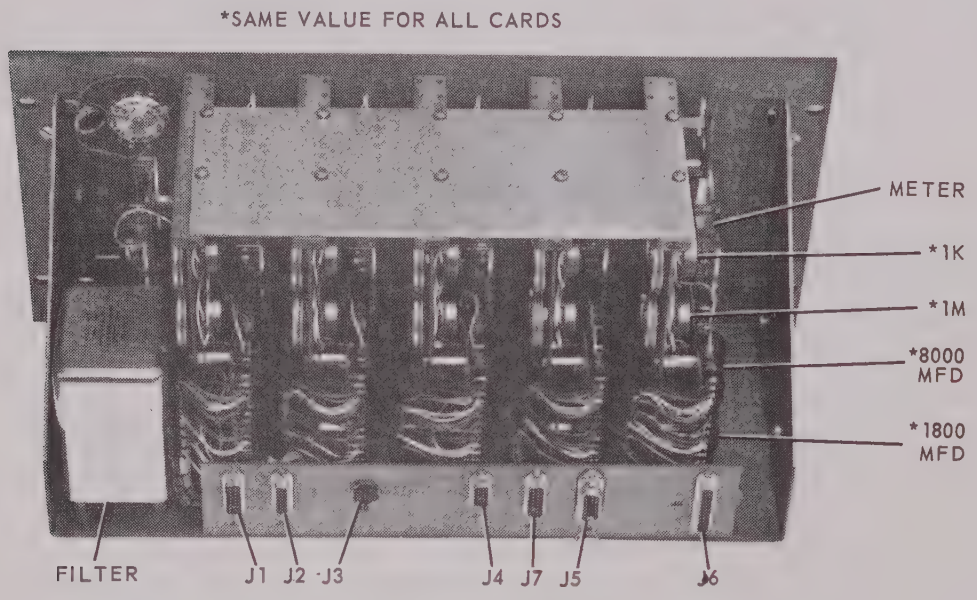

Fig. 4-10 Model 5LF-40A, Low Frequency Equalizer

(b). Set switch S102 to the 0.1 g^2/cps range.

(c). Adjust R108 for a full-scale indication on meter M101 (2 milliamperes).

(d). Set switch S102 to the 1 g^2/cps range (adjust the current source for 6.35 milliamperes). Meter M101 should indicate full scale $\pm$2%).

(e). Set switch S102 to the 10 g^2/cps range (adjust the current source for 20 milliamperes). Meter M101 should indicate full scale $\pm$2%.

(f). Repeat steps (a) through (e) for the remaining 4 channels.

(4). Above 2 KC channel calibration.

(a). Connect the dc current source to J1-6 and J6-6 and adjust for 20 milliamperes.

(b). Meter M1 should indicate full scale.

e. Model A-10 (MO-30) Filter Driver Amplifier.(refer to figure 4-11 and drawing 42521)

(1). Test equipment.

(a). Refer to table 4-1 for standard test equipment required.

(b). 8-ohm, 50-watt resistor.

(c). 100-ohm, 1/2-watt resistor.

(2). Preliminary settings and connections.

(a). Connect instrumentation ground to ground of input terminals.

(b). Connect the 8 ohm, 50 watt resistor between the 4 ohm tap and common (at the output terminals).

NOTE

Remove any jumper that might be between common and ground. No jumper is required.

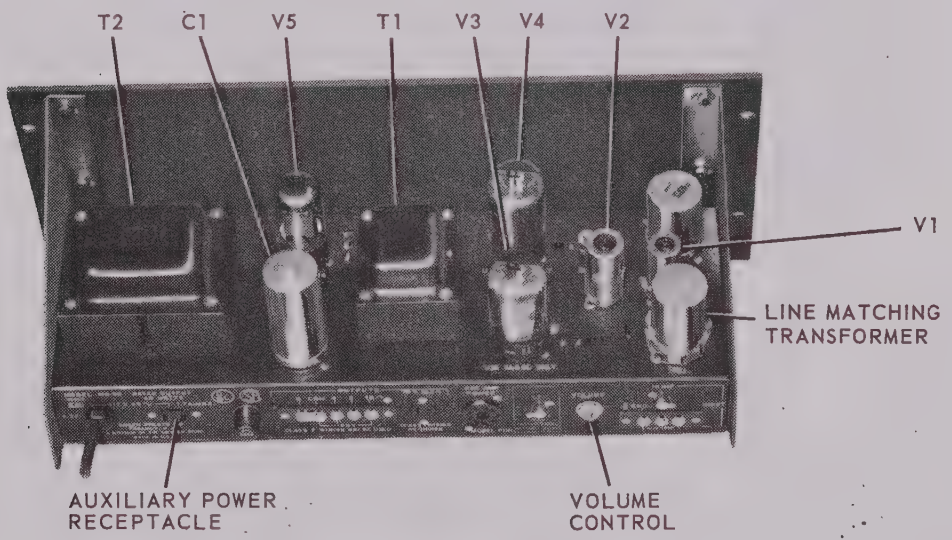

Fig. 4-11 Model A-10 Filter Driver Amplifier

(c). Connect the 100-ohm, 1/2-watt resistor across the output of the oscillator.

(d). Set the oscillator at 500 cps, 0 volt.

(e). Connect the oscillator to the LOW IMPEDANCE input of the A-10.

(f). Turn the VOLUME CONTROL fully clockwise.

(g). Connect dc ammeter to the plate circuit of 6L6.

(h). Set the range switch to 300 milliamperes.

(3). Plate current balance.

(a). Apply power to the amplifier.

(b). Adjust R2 for equal plate currents in both output tubes (approximately 70 milliamperes).

(4). Distortion.

(a). Adjust the oscillator to obtain 10 volts across the 8-ohm, 50-watt resistor.

(b). The input voltage should be 0.5 volts rms ±20%, and the output distortion should be less than 1% from 50 cps to 2,000 cps.

(c). Adjust the oscillator for 2 volts rms at 10 cps at the output of the amplifier.

(d). Readjust R2 for minimum distortion. Distortion should be less than 3%.

(5). Frequency response.

(a). Adjust the oscillator for an A-10 amplifier output of 1 volt.

(b). The response from 10 cps to 2,000 cps should be flat ±0.5 db.

(6). Hum and noise.

(a). Disconnect the oscillator.

(b). Short the amplifier input.

(c). Hum and noise should be 80 db below rated output (11 volts).

(d). Set the VOLUME CONTROL fully counterclockwise.

f. SSM-50A Scanner. (refer to figure 4-12 and drawing 5857)

(1). Test equipment.

(a). Refer to table 4-1 for standard test equipment required.

(b). Two 250-volt, 30-milliampere power supplies.

(c). Source of dc voltage (50 millivolts to 2 volts).

(2). Channel indicating circuit tests.

(a). Connect ac power.

(b). Set SCAN SPEED to MANUAL.

(c). Arbitrarily press indicators to ensure stepping switch will seek and stop at indicator pressed.

(d). Set SCAN SPEED fully clockwise. The scanner should step at approximately 9 steps per second.

(e). Set SCAN SPEED to MANUAL.

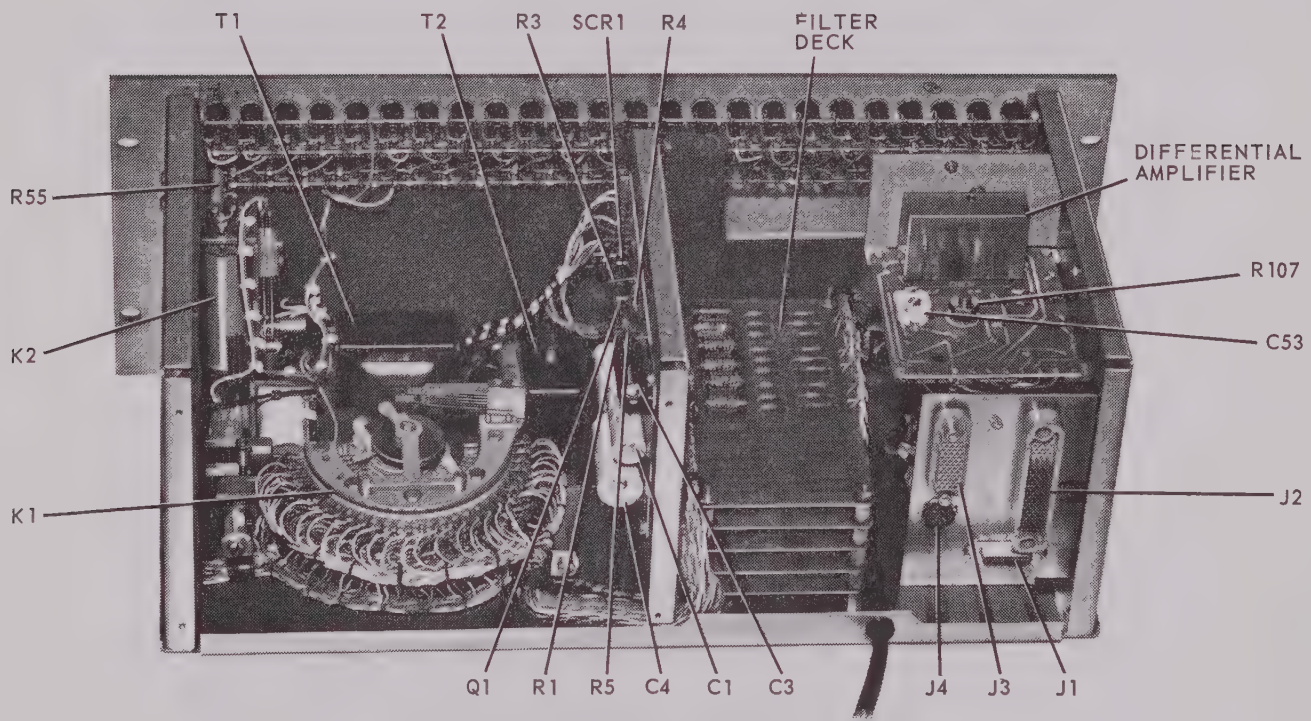

Fig. 4-12 Model SSM-50A Scanner, Rear View

(3). Differential amplifier calibration.

(a). Connect power supplies to connector J4 to provide ±250 volt, -250 volt, and common (J4-B, J4-D, and J4-A).

(b). Connect the chassis to earth ground.

(c). Press the channel 1 indicator and check that the scanner stops at channel 1.

(d). Short J1-1 (+) and J1-9 (-) together.

(e). Short J1-1 to ground.

(f). Apply power from the supplies in step (a).

(g). Measure the voltage at diodes CR49 and CR50. Indications should be +15 volts and -15 volts, ±5% respectively.

(h). Connect a DC VTVM to pin 9F of connector J3.

(i). Adjust the potentiometer on the Philbrick differential amplifier for 0 ±250 microvolts on the DC VTVM. Record the exact indication.

(j). Remove the ground from J1-1.

(k). Connect 0.5 vdc to J1-1 and J1-9.

(l). Adjust potentiometer R107 for the voltage recorded in step (i).

(m). Remove the DC VTVM.

(n). Connect an AC VTVM to pin 9F on connector J3.

(o). Connect the oscillator to J1-1 and J1-9.

(p). Set the oscillator for 100 cps at 5 volts.

(q). Adjust capacitor C53 for a minimum indication on the AC VTVM. This indication must be below 10 millivolts rms.

(r). Remove the oscillator and the AC VTVM.

(s). Press the channel 1 indicator and check that the scanner stops at channel 1.

(t). Connect the DC VTVM to pin 9F of connector J3.

(u). Connect 0.5 vdc to connector J1 (pin 1 +, pin 9 -).

(v). The VTVM should indicate positive 0.5 volt (+0, -6)%.

(w). Change the dc input to 2 volts and to 20 millivolts, noting the output. The output should be linear ±1.0%.

(x). Repeat steps (s) through (w) for channels 2 through 45. Apply the dc input to the appropriate J connectors in accordance with the following:

CONNECTOR	CHANNEL	TERMINAL	DESIGNATION
J1	1 through 5	Positive (+)	1 through 5
		Negative (-)	9 through 13
J2	6 through 15	Positive (+)	A odd (1 through 19)
		Negative (-)	B even (2 through 20)
J2	16 through 25	Positive (+)	C odd (1 through 19)
		Negative (-)	D even (2 through 20)

CONNECTOR	CHANNEL	TERMINAL	DESIGNATION
J2	26 through 35	Positive (+)	E odd (1 through 19)
		Negative (-)	F even (2 through 20)
J2	36 through 45	Positive (+)	G odd (1 through 19)
		Negative (-)	H even (2 through 20)
J1	46	Positive (+)	6
		Negative (-)	14

(4). X axis calibration.

(a). Connect a DC VTVM to J3, pin 7F.

(b). Set SCAN SPEED to midrange.

(c). The VTVM should indicate 0 volt for channel 1.

(d). The indications should step in increments up to approximately 20 volts for channel 46.

4-9. TROUBLESHOOTING

a. When attempting to correct an inoperative circuit in the Model ASDE-40, there is no substitute for understanding the principles of operation. The circuit descriptions given in Section 3 of this instruction manual will be of great value in the comprehension of the system.

b. Comparison of performance in the MANUAL and AUTOMATIC modes of operation may provide the needed information to correct a malfunction. Operation of the Model ASDE-40 with the CP-10A LEVEL CONTROL in the CAL position (servo loop closed upon itself) versus operation with the power amplifier and shaker may also provide valuable information.

c. Response of the unit to the calibration procedures may pinpoint the problem. It should be realized that while location of the malfunction to a section or a specific circuit is an excellent approach, this may be difficult to accomplish in a system employing overall feedback (as in the servo control loop).

d. It is possible that the Model ASDE-40 is not actually at fault. The problem may be in the signal conditioning equipment, power amplifier or shaker, fixture design, the specimen or the accelerometer.

e. The following information, in conjunction with table 4-2, should provide a sound troubleshooting basis upon which to proceed:

(1). Isolation of circuit ground from frame ground.

(a). Make certain all power is off.

(b). Remove the ground buss mounting screws located at the lower left-hand side of the equalizer filter bank.

(c). Insert fish paper or tape between the buss and metal stud.

NOTE

Make sure that the two pieces of buss are making contact with each other but are insulated from the metal stud.

(d). Remove the ground buss mounting screw located at the upper right-hand side of the analyzer filter bank.

(e). Insert fish paper or tape between the buss and metal stud.

NOTE

Make sure that the two pieces of buss are making contact with each other, but are insulated from the metal stud.

(f). Remove connector J1 from the APS-10A (figure 4-13).

(g). Remove all external connections to the ASDE-40.

(h). With a VOM, measure the resistance between circuit ground and frame ground. This indication must be greater than 10 megohms.

(2). Front panel control settings.

(a). On the PD-10B, set the LINE breaker off.

(b). On the MR-40-1, set all meter range switches to 10.

(c). On the SE-40, set all spectrum shaping potentiometers fully down.

(d). On the CM-40A, set all mode selector switches to MANUAL.

(e). On the CP-10A, set the LEVEL CONTROL to 0.

(f). On the CP-10A, press the ACC 1 pushbutton.

(g). On the 5LF-40A, set the range switches to 10, METER DAMPING to HIGH, equalizers fully down, and mode selectors to MAN.

(h). On the GRN-200A, set the function switch to DUAL AUX.

(i). On the SSM-50A, select the REF channel.

(3). Resistance checks.

(a). Remove all AMD-10 meter amplifier cards. Mark each card to indicate the channel from which it was removed.

CAUTION

DO NOT INTERMIX CARDS BETWEEN CHANNELS. IF THIS IS DONE, IT WILL BE NECESSARY TO PERFORM ANALYZER CALIBRATION.

(b). With a Simpson Model 260 (or equivalent), measure the resistance to frame ground from pins F and H (output) of each meter amplifier card. These indications should be approximately 250k (except channel 46 which should be greater than 10 megohms).

NOTE

If the measured resistance is 100k, two channels are crossed; if resistance is 500k, the magnetic amplifier is not seated properly; if resistance is infinity, there is an open circuit to the magnetic amplifier card.

(c). Measure the resistance across F and H of each meter amplifier card socket. These indications should be approximately 250 ohms (except for channel 46 which should be approximately 175 ohms).

(d). Remove all magnetic amplifiers from connectors. Mark each card to indicate the channel from which it was removed.

CAUTION

DO NOT INTERCHANGE CARDS BETWEEN CHANNELS. IF THIS IS DONE, IT WILL BE NECESSARY TO REPEAT STEPS E, M, AND N, OF PARAGRAPH 4-2, AND ALL OF PARAGRAPHS 4-5, AND 4-7.

(e). Measure the resistance (in the AUTOMATIC mode of operation) between pins B and L on the magnetic amplifier assembly card connectors. The resistance with the spectrum shaping potentiometers fully up will be 10 ohms, and with the spectrum shaping potentiometers fully down will be 1k.

TABLE 4-1 RECOMMENDED TEST EQUIPMENT

TEST EQUIPMENT	USED FOR CALIBRATION OF
AC VTVM, Ling VTVM-3	Analyzer and Equalizer
X-Y Plotter, Moseley Model 2 or 5	Analyzer
Log Converter, Moseley Model 60B or 60D	Analyzer
Oscillator, Hewlett Packard Model 202C	SSM-50A (Scanner) PA-1 (Preamplifier) PA-2 (Preamplifier)

TABLE 4-1 RECOMMENDED TEST EQUIPMENT (cont)

TEST EQUIPMENT	USED FOR CALIBRATION OF
	LA-3 (Amplifier) Magnetic Amplifier Assembly A-10 (Filter-Driver Amplifier)
Distortion Analyzer, Hewlett Packard Model 330B	SSM-50A (Scanner) PA-1 (Preamplifier) PA-2 (Preamplifier) LA-3 (Amplifier) A-10 (Filter-Driver Amplifier)
Multimeter, Simpson Model 270	SSM-50A (Scanner) PA-1 (Preamplifier) PA-2 (Preamplifier) LA-3 (Amplifier)
Power Supply, Krohn-Hite Model UHR-225	PA-1 (Preamplifier) PA-2 (Preamplifier) LA-3 (Amplifier)
Counter, Hewlett Packard Model 522-B	Equalizer
Oscilloscope, Hewlett Packard Model 120-A	Magnetic Amplifier Assembly A-10 (Filter-Driver Amplifier)
Ammeter, Hewlett Packard Model 428B	A-10 (Filter-Driver Amplifier) GRN-200A
AC VTVM, Hewlett Packard Model 400D	Magnetic Amplifier Assembly

NOTE

The listed test equipment may be replaced by any suitable equivalent.

TABLE 4-2 TROUBLESHOOTING

TROUBLE	PROBABLE CAUSE
No power	Check to see that unit is connected to correct line voltage.
Fuse open (PD-10-B chassis, F1, F2 or F3)	Check for defective tubes. Check for defective power supplies. Check the +250 and -250 volt supplies. Check the A-10 driver amplifier. Check the scanner (SSM-50A). Check the 6.3 vdc filament supply.
Cannot calibrate	Check interconnect plugs for opens or shorts. Check for dirty contacts on the range switch. Check values of 1% resistors. Check diodes for leakage (MR-40-1).
No signal in one channel	Check the connectors on the rear of the chassis. Check resistance of the spectrum shaping potentiometer. Check the input and output signal voltage of the AMD-10 cards. Check LDR volts (paragraph 4-2, steps e, N through x). Check the test point voltage on AMD-10 cards. Check power supply voltages.
Loss of all channels	Check power supply voltages. Check input and output signal to the PA-1 Preamplifier. Check input and output signal to the A-10 Driver amplifier. Check input and output signal to the LA-3 Amplifier.
Loss of all channels in one cabinet	Check power supply voltage (+55 and +250). Check input and output signal of the PA-2 Preamplifier.
No output from scanner	Check the calibration of the differential amplifier. Check all connections and interconnecting plugs.

TABLE 4-2 TROUBLESHOOTING (cont)

TROUBLE	PROBABLE CAUSE
High residual meter indications on Analyzer	Check AMD-10 meter amplifier cards for high residual indications.
Poor linearity between scales (0.1 g^2/cps, 1 g^2/cps and 10 g^2/cps ranges).	Check for leakage of zener diodes in the MR-40-1 chassis. Check linearity of AMD-10 meter amplifier cards.
Erratic meter movement in the LOW damp position with noise applied (5LF chassis).	Check 1800 mfd, 3 volt capacitor associated with the channel or channels (MR-40-1 chassis) for leakage or improper contact with printed circuit board. Check for loose plug connections.
Erratic meter movement in HIGH damp position with noise applied (5LF-40A chassis).	Check 1800 mfd, 3 volt capacitor and 8000 mfd, 3 volt capacitor associated with the channel or channels (MR-40-1 chassis) for leakage or improper contact with printed circuit board. Check for loose plug connections.

CAUTION

DO NOT ATTEMPT ADJUSTMENT OF METER MOVEMENT (SA-40B ASSEMBLY) AS THEY ARE SEALED. CONTACT THE FACTORY FOR INSTRUCTIONS.

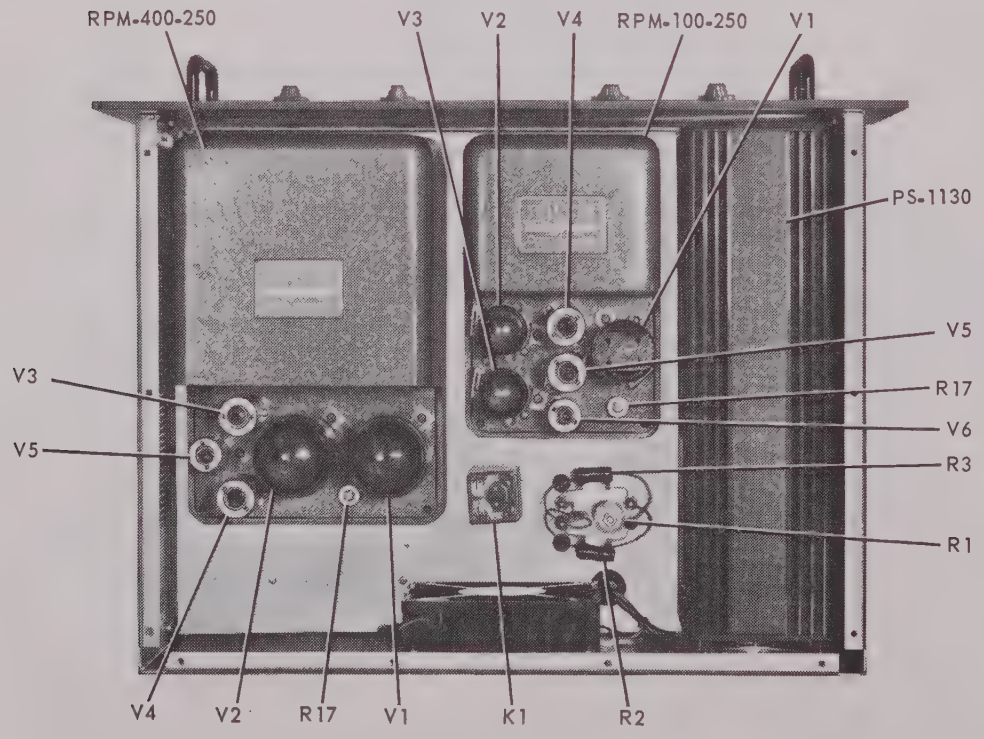

Fig. 4-13 Model APS-10A Power Supply

4-10. CLEANING

a. The only cleaning of the Model ASDE-40 that is required is to keep all chassis free of dust. Clean chassis (with a low pressure air hose) at least once every two months.

b. Air filters should be replaced when dirt becomes noticeable. The period of replacement depends on use. In very dusty locations, filters may need replacing each month or every few weeks. An excessive accumulation of dust inside the cabinets is a reliable indication that filters should be replaced.

4-11. LUBRICATION

a. The rotary switch of the Model SSM-50A must be lubricated at 50,000, 100,000 and 250,000 half-revolutions and at every 500,000 half-revolutions thereafter. For operation in low temperatures, a special lubricant (available on special request from the manufacturer) is required.

b. Clean the switch thoroughly and lubricate as outlined in the following procedure (refer to table 4-3 and figure 4-3). Blended lubricating oil and dipper applicator are supplied with the chassis.

(1). Place one dipper of oil (Spec. 5684):

(a). Between each end of the two yoke bearings (1).

(b). On the pawl pin, where the pawl and the pawl bearing pin contact the armature (2).

(c). On the driving-spring seats and coils (3).

(d). On the interrupter spring buffers (4).

(e). On the off-normal springs (do not lubricate the nylon bushings)(5).

(f). On the pawl spring mounting holes and coils (6).

(2). Place two dippers of graphite lubricant (Spec. 5232-C) on the rachet teeth (rotate the wiper assembly during lubrication in order to distribute the lubricant evenly over all the teeth) (7).

(3). Place one dipper of water oil (Spec. 5228) between the wiper tips of three pairs of wiper springs (8).

NOTE

Both ends of the wiper springs should be lubricated: The three level wiper assembly would require two dippers of oil, one for each end. Rotate the wipers after lubrication to ensure even oil distribution over the entire bank.

(4). To lubricate the brush springs (not shown in figure 4-14, position the wiper assembly so the wipers are resting on the 18th contact. Apply one dipper of watch oil to the insides of two wipers, at a point near the hub so that when rotated, the lubricated portion of the wiper will contact the brushes. When all the wipers have been lubricated in this manner, rotate the wiper assembly 180 degrees and repeat the process; example, a six-level switch would require six dippers of lubricant (9).

TABLE 4-3 MODEL SSM-50A SELECTOR SWITCH LUBRICATION CHART

SYMBOL	DESCRIPTION	ORDER NUMBER	AMOUNT	REMARKS
	Spindle oil (5231)	H-78612-5	2 oz.	For lubricating bearing and bank contacts.
	Spindle oil (5231)	H-78612-6	4 oz.	
(1) thru (6)	Blended lubricating oil (5684)	H78612-31	2 oz.	For lubricating type 44 and 45 rotary switches.
(7)	Graphite oil lubricant (5232-C)	H78612-9	2 oz.	For lubricating rotary and minor switch ratchet wheels.
	Low temperature oil-drag lubricant (5563)	H78612-28	2 oz.	For lubricating minor switch in low temperature operation.
(8)	Watch oil (5228)	H-78612-30	2 oz.	For lubricating rotary switch wiper tips and brushes.

9 NOT SHOWN

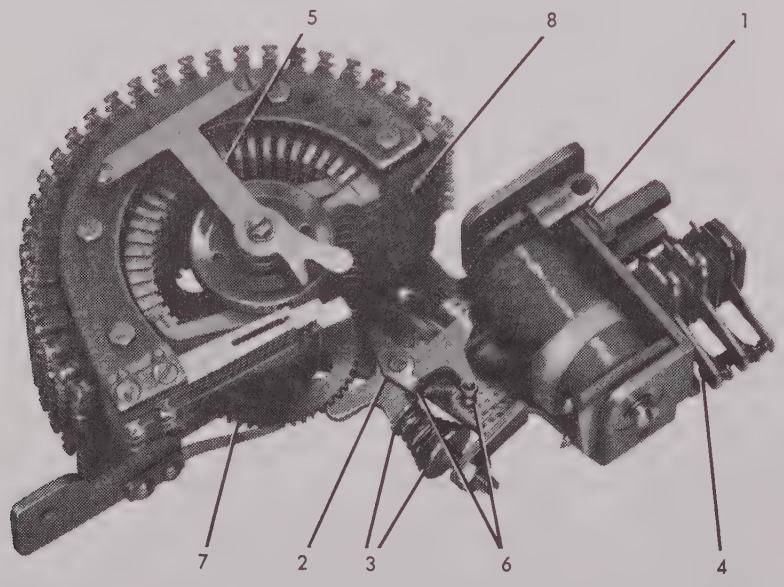

Fig. 4-14 Model SSM-50A, Switch Lubrication

4-12. OTHER DIFFICULTY

In the event of troubles not covered in this manual, contact the factory giving serial number, Ling number, conditions of use, and a full description of the problem. For service east of the Mississippi River, contact the Eastern Field Service Office at LTV Ling Electronics Division, Ling-Temco-Vought, Inc., 120 Cross Street, Winchester, Massachusetts. For service west of the Mississippi River, contact the Western Field Service Office at LTV Ling Electronics Division, Ling-Temco-Vought, Inc., 1515 South Manchester Avenue, Anaheim, California. Ling field service personnel are constantly available for consultation on special problems concerning utilization or application of Ling equipment.

4-13. ENGINEERING DRAWINGS

The following engineering drawings are referred to in this technical manual:

42420	Block Diagram Functional
20960	Schematic Meter Amplifier
32755	Schematic Magnetic Amplifier
43647	Schematic LDR
31156	Schematic Amplifier PA-1
31157	Schematic Amplifier PA-2
31158	Schematic Amplifier LA-3
20966	Schematic Meter/Meter Range Switch
32782	Schematic Mode Selector Switch
31299	Schematic APS-10-A
5934	Schematic Dual Noise Generator GRN-200A
32634	Schematic Relay Assembly
42521	Schematic MO-30 Modified
5857	Schematic SSM-50A
43728	Schematic Low Frequency Equalizer 5LF

BOGEN

MODEL MO30A

30 WATT BOOSTER AMPLIFIER

LEAR SIEGLER, INC.
BOGEN COMMUNICATIONS DIVISION
P.O. BOX 500
PARAMUS, NEW JERSEY

INSTALLATION AND OPERATING MANUAL

READ THOROUGHLY BEFORE OPERATING EQUIPMENT

INTRODUCTION

The Bogen MO30A is a booster amplifier capable of delivering 30 watts of audio power. It is ideal for installation with sound systems in industrial plants, stadiums, theaters and auditoriums. This high quality amplifier has exceptional power handling ability over the entire range of audio frequencies.

The MO30A has provisions for high and low impedance inputs. Balanced outputs are provided for 4, 8 and 16 ohm speaker impedances and for operation with 25 volt and 70 volt line speaker systems. This eliminates difficulties encountered in speaker matching when unequal amounts of power are required for different speakers of a distribution system. Sockets are provided on the chassis for power to an external preamplifier.

Two or more MO30A booster amplifiers may be connected in parallel for installations requiring more than 30 watts of power. This is made possible by interconnecting the C.P. (Cathode Paralleling) jacks of the unit and paralleling the inputs and outputs of the units. The C.P. connections tie the feedback components of the amplifier together, thereby balancing their characteristics.

TECHNICAL SPECIFICATIONS

POWER OUTPUT: 30 watts
HARMONIC DISTORTION: Less than 2% at 30 watts output.
FREQUENCY RESPONSE: ±1 db, 4 to 70,000 cps.
POWER RESPONSE: 30 watts at less than 5% distortion, ±1 db from 25 to 50,000 cps.
DUTY CYCLE: Continuous.
HUM: -75 db.
DAMPING FACTOR: 5 to 1
REGULATION: 2 db or better.
SENSITIVITY:
High Impedance: better than 2 volts
Low Impedance: better than 0.5 volts

INPUTS:
High Impedance: 0.5 megohms
Low Impedance: 500 ohms balanced (using T161 transformer) or 500/600 ohms balanced (using T165B line transformers).
OUTPUTS: 4, 8 and 16 ohms balanced, 25 volt balanced 20.8 ohms, 70 volt balanced 163 ohms.
POWER REQUIREMENTS: 110 watts at 1 amp for 117 volt, 50/60 cycle operation.
TUBES AND RECTIFIERS: 7247, 7868 (2); 3 silicon rectifiers.
DIMENSIONS: 8" wide, 13" deep, 6¼" high.
WEIGHT: 16 lbs.

ACCESSORIES

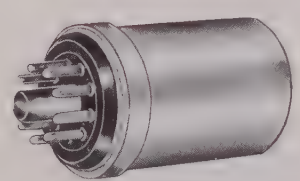

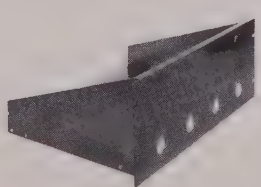

LINE MATCHING TRANSFORMERS – Models T161, T163, T164, T165B constitute a group of plug-in type "zero level" line input transformers.

The T161 is intended to operate with 500/600 ohm line carrying wide range program material.

The T163 is designed to bridge across 500/600 ohm lines carrying wide range program material. As many as ten may be used across a line without the total load impedance falling below the nominal line impedance.

The T164 is designed to operate from telephone lines carrying speech energy. The extremely high transformation ratio permits use with lines operating at low transmission levels.

The T165B is designed to operate from 500/600 ohm lines carrying extremely wide range program material in applications where maximum insensitivity to hum fields, and minimum longitudinal unbalance are desired.

MODEL RPK-18 RACK PANEL MOUNTING KIT – The model RPK-18 Rack Panel Mounting Kit is available to mount the amplifier in any standard 19" rack panel. Two MO30A amplifiers will fit on one RPK-18. Panel includes all necessary cutouts.

Finish is grey metalustre and size is 19" w x 7" h x 13" d.

BOGEN PREAMPLIFIERS DESIGNED FOR USE WITH MO30A

MODEL MXM 5-INPUT MIXER-PREAMPLIFIER — **Higher gain — outstanding sensitivity — excellent signal-to-noise ratio — high output at low distortion — extremely low hum level.** The MXM is self-powered, accommodates five microphones, or four microphones and a tuner or phonograph. Each channel is regulated by a separate gain control (a master gain control is also provided). Features: individual speech filters for each channel, output level meter, sockets for plug-in, low-impedance transformers, feedback type, distortion-free tone controls, and new variable level markers which permit instant resetting of controls to previously determined levels. May be remote controlled with SR2 and SR4 remote controllers.

SPECIFICATIONS

output: +18 dbm @ less than 1% dist. **power consumption:** 27 watts. **frequency response:** ± 2 db, 20 to 20,000 cycles. **input sensitivity:** high imp.: 4 mv. Low imp.: 0.4 mv. MAG: 4 mv; XTAL: 0.2v; AUX: 0.5v. **hum:** (below rated output): microphone: −60 db. **output impedance:** high imp.: (cathode follower): 600 ohms with T161 or T165B (broadcast quality) accessory plug-in transformers. **tubes:** total 9. 4-EF86, 2-12AX7, 1-6CG7, 1-6BF6, 1-6X4. **tone controls:** treble (10 kc): +12 db to −12 db; bass (60c): +12 db to −12 db. **overall dimensions:** 16¼" wide, 13" deep, 5⅜" high. **shipping weight:** 21 lbs.

MODEL RP-2 . . . 2-INPUT MIXER-PREAMPLIFIER — **Designed for use at remote pickup points. Contains separate input channels for one microphone and one phonograph. Separate volume controls for each channel permit mixing of inputs. The output is designed to feed either a booster amplifier or a low impedance line separately or simultaneously. A bass cut-off switch provides speech clarity. Enclosure with VU meter (as illustrated) is available.**

SPECIFICATIONS

power consumption: 20 watts, 117 volts ac, 60 cycles. **gain:** microphone: 76 db, phono: 35 db, **sensitivity:** microphone: 3.5 mv., phono: 0.4 v. **bass cut:** 20 db. **output impedance:** high impedance: cathode follower driven; minimum recommended lead resistance — 10,000 ohms. Low impedance: 600 ohms (50 and 200 ohms). **input impedance:** high impedance: ½ megohm, convertible to low impedance by use of plug-in transformers for 50, 150-250 or 6pp ohms. **pilot light:** #47. **tubes:** total 4—2-6SF5, 1-6J5, 1-6X5GT. **dimensions:** 11" w. x 5¼" h. x 7⅜" d. (excluding knobs). With cage, height is 6½". **weight:** 7lbs. **CAGYU2** cage with meter—optional extra.

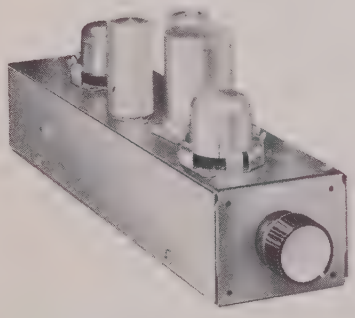

MODEL PDR MICROPHONE PREAMPLIFIER — **Designed to amplify low level signals such as the output of a microphone to level suitable for driving power amplifier or feeding to transmission line. Intended for rack mounting and plugs into model CR-1 rack without use of tools. May also be mounted in conventional manner. Volume or tone may be remotely controlled using models RVX or RTX remote control units.**

SPECIFICATIONS

input: high: 500,000 ohms; low: 50 ohms (T157 input transformer): 150-250 ohms (T155 input transformer); 500 ohms (T156 input transformer). **output:** 10,000 ohm cathode follower; 600 ohm balanced (T161 plug-in transformer). **output level:** 8 volts across 10,000 ohms or + 8 dbm across 600 ohms. **frequency response:** 20 to 20,000 cps, +0 −1.5db. **gain:** high impedance 75db. **harmonic distortion at rated output:** (high impedance input and output) 0.4% @ 20,000 cps, 0.6% @ 20 cps. **signal-to-noise ratio:** 68db. **tubes:** two 12AT7. **dimensions:** 3" w., 4⅝" h., 12 ⅝" long. **weight:** 2 lbs.

INSTALLATION

UNPACKING

The unit was carefully checked before leaving the factory. Inspect shipping container and amplifier carefully for indication of improper handling in shipment. If unit has been damaged, make an immediate claim to the dealer or distributor from whom it was purchased. If unit was shipped to you, notify transportation company without delay and file a claim.

CONNECTIONS BETWEEN COMPONENTS

Use single-conductor, low capacity shielded wire for connecting preamplifier to amplifier. Keep leads under ten feet in length, unless cathode follower output is employed.

Speakers may be connected with standard flexible line cord (zip-cord) and up to 100 feet of cable may be used without appreciable loss.

Make certain that all audio cables are kept away from speaker cables, power cables, and power transformers, and that speaker cables are kept away from power cables.

POWER

Connect the line cord to a wall outlet supplying 117 volt AC, 50/60 cycle power. Power to the amplifier may be controlled by means of the Power ON-OFF switch located on the front panel. To have amplifier turned on and off by preamplifier, refer to Operation

section.

An AC receptacle has been included on top of the amplifier chassis to supply power to other components in system, not exceeding 400 watts.

The receptacle is controlled by the Power switch, and any component connected to it will be turned off by the power switch.

A 9-prong socket marked PREAMP POWER is available on top of the chassis to provide plate and filament voltages to a Bogen Model PDR preamplifier.

GROUNDING THE UNIT

Ground the amplifier by attaching a wire from a GND terminal on the chassis rear to a good ground such as the metal frame of the wall outlet or a water or steam pipe.

INPUT CONNECTIONS

HIGH IMPEDANCE

Using the high impedance input, the amplifier can be driven to full output from any preamplifier capable of developing 2.0 volts across a 500,000 ohm load. Connect the preamplifier output to either of the inputs marked HI Z on the rear of the amplifier.

The high impedance input may also be used when the input signal is obtained from another power amplifier with a 70 volt output tap. Make connections to the HI Z input receptacle as shown in the circuit below.

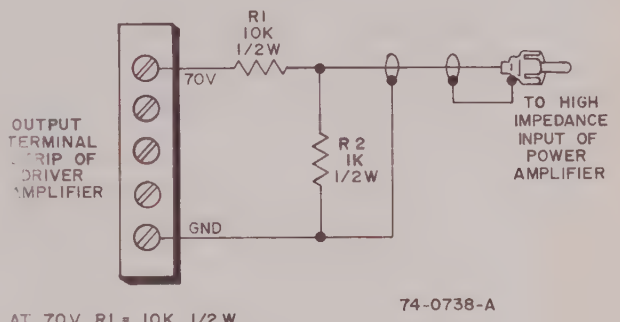

74-0738-A

AT 70V R1 = 10K, 1/2W
AT 25V R1 = 3300Ω, 1/2W

LOW IMPEDANCE

Using the low impedance input, the amplifier can be driven to full output from any preamplifier capable of developing 0.5 volts across a 500 ohm load.

A line matching transformer Bogen model T161 is recommended for this application. The transformer is plugged into transformer socket XI on the amplifier chassis.

NOTE: *The network above is in addition to the normal load (loudspeakers, etc.) on the output of the driver amplifier.*

OUTPUT CONNECTIONS

SPEAKERS

The MO30A amplifier may be connected to speakers rated at 4, 8 or 16 ohms or used with 25 volt or 70 volt constant voltage line systems.

For 4, 8 or 16 ohm operations, connect one lead from the speaker to the COM 1 terminal and the other to the appropriate 4, 8 or 16 ohm terminal on the rear of the amplifier chassis.

For 70 volt unbalanced operation connect leads to 70V (163 ohm) terminal and COM 2 terminal, and connect shorting wire from COM 2 terminal to GND if grounding is desired. For 70 volt balanced operation remove shorting wire between COM 2 terminal and GND and connect leads from 70V (163 ohm) to COM 2. A Jones plug # P302-CCT and class 2 wiring may be used.

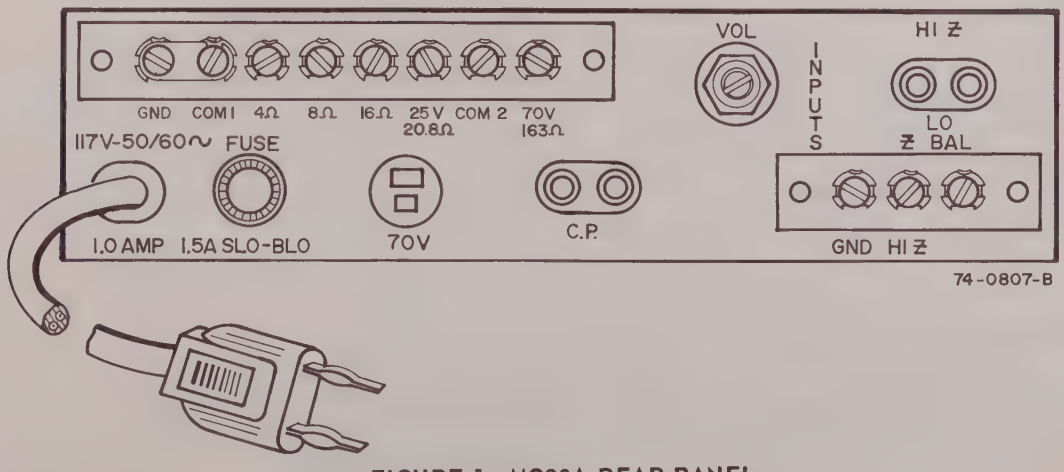

74-0807-B

FIGURE 1 – MO30A REAR PANEL

For 25 volt unbalanced operation connect leads between 25V (20.8 ohm) terminal and COM 1; for balanced 25 volt operation remove shorting link between COM 1 and GND.

PARALLELING AMPLIFIERS

Two or more model MO30A amplifiers may be operated in parallel in a system which requires more than 30 watts output power. Two paralleled amplifiers will provide up to 60 watts, three amplifiers up to 90 watts.

Dual high input (HI Z) receptacles and dual cathode paralleling (C.P.) jacks, are provided on the rear of the amplifier chassis to facilitate paralleling of amplifiers without wiring. When paralleling amplifiers interconnect the units as shown in figure 2. Any number of units may be paralleled to provide the desired output power. The interconnecting cable for the HI Z and C.P. receptacles should be standard audio shielded cable with phono type plugs at both ends.

NOTE: *Only transformer taps of the same output impedance should be paralleled. It must be borne in mind that paralleling outputs reduces the output impedance.*

The 70 volt outputs of two or more MO30A amplifiers may be connected in series to provide a 140 volt output voltage for two amplifiers or 210 volts for three units. To install a series hook-up, connect the 70 volt outputs of the MO30A amplifiers as shown in figure 3. The HI Z and C.P. outputs are paralleled as described above and as shown in figure 2.

CAUTIONS *READ CAREFULLY*

1. Do not connect a phonograph to the AC receptacle on top of the amplifier chassis, as this may cause flats to appear on the phono idler wheel. If the amplifier controls the power to the phonograph, there is a danger that the amplifier might be turned off before the phonograph is disengaged, thereby damaging the idler wheel.
2. When paralleling amplifiers be certain that SPEECH-MUSIC switch on the top of the amplifier chassis is in the same position on all amplifiers. Rotate VOLUME control fully clockwise on all amplifiers. If it is desired to reduce the volume, each amplifier's VOLUME control should be set so that exactly equal gains are achieved for each amplifier. Preferably a common resistance loss circuit should be installed to achieve best results.

OPERATING CONTROLS

POWER SWITCH

Although the MO30A incorporates a Power ON-OFF switch, it is advantageous to control the unit from the preamplifier. In this way the MO30A will be switched on and off together with the preamplifier, thereby simplifying operation. The power cord of the MO30A should therefore be inserted into the controlled Auxiliary Power receptacle of the preamplifier, which is controlled by the ON-OFF switch on the preamplifier.

If the MO30A cannot be controlled from the preamplifier unit, then the Power switch on the MO30A should be used to turn it ON and OFF.

VOLUME CONTROL

The volume control on the MO30A is used to compensate for a great variation in preamplifier output levels. Thus, if the preamplifier output is very high, the user will find it is necessary to operate the preamplifier's volume control near minimum to prevent "blasting" volume output from the speaker system. Conversely, if the preamplifier output is low, the preamplifier's volume control may have to be operated near maximum to achieve sufficient volume.

The volume control on the rear chassis thus permits the user to adjust the gain of the MO30A so that the preamplifier's volume control is operated in its mid-range to achieve the desired volume level range. This control need be set only once on installation and is, therefore, a screwdriver adjustment.

SPEECH-MUSIC SWITCH

The SPEECH-MUSIC switch, located on top of the chassis, is used to provide optimum response for speech when placed in SPEECH position.

INPUT TERMINAL SWITCH

The Input Terminal switch, located on top of the chassis, is used for switching between high impedance and low impedance inputs on the input terminals. When low impedance input is desired, the proper impedance matching transformers (T161, T163, T164 or T165B) should be plugged into socket XI and the switch placed in LO Z position.

SERVICE

PILOT LIGHT REPLACEMENT

The pilot light is located in a holder behind a jewel on the front panel. To replace bulb, first remove eight self tapping screws holding chassis bottom plate. Press bulb in and rotate counterclockwise slightly. The bulb will then spring free. Use only a #47 bulb for replacement.

FUSE REPLACEMENT

A 1.5 ampere slow-blow fuse is located on the

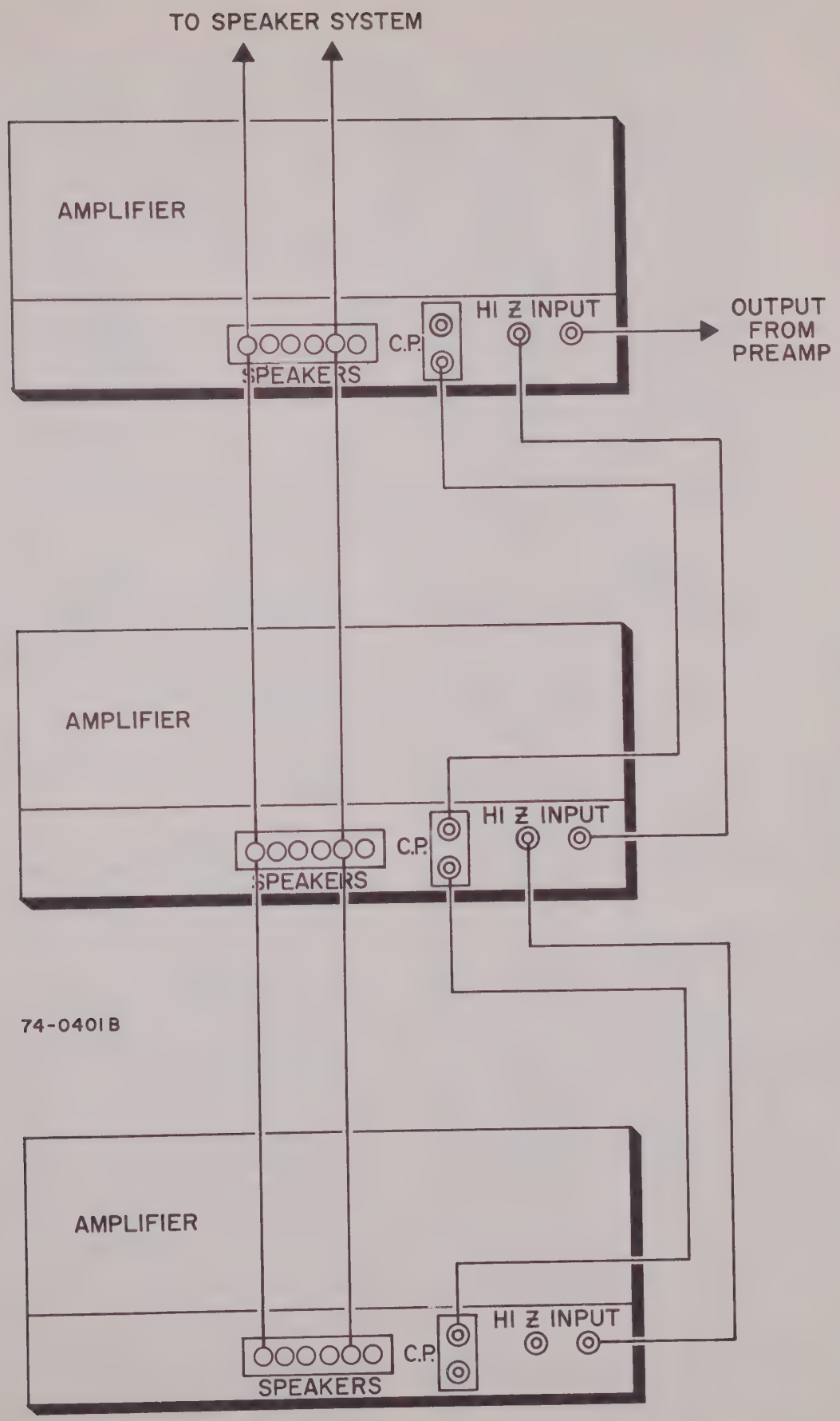

FIGURE 2 – PARALLELING AMPLIFIERS

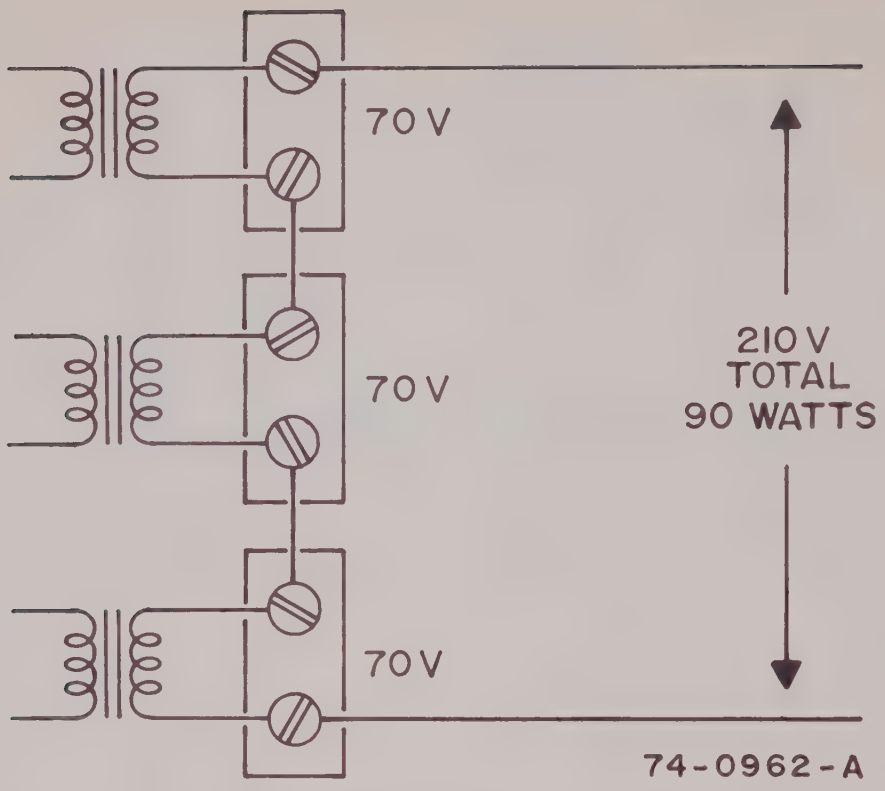

FIGURE 3 – SERIES HOOKUP 70 OF VOLT OUTPUTS

rear of the chassis. To replace fuse, press the spring-loaded cap slightly inward and withdraw cap and fuse. Use only a fuse of the same rating for replacement. If a second fuse blows, do not attempt to operate the equipment further. Consult an experienced technician or Bogen representative for inspection of the unit.

BALANCING OUTPUT TUBES

If any of the two 7868 output tubes are replaced, balance tubes as follows:

1. Connect a dummy load across amplifier output, which is capable of handling full rated power output. In addition connect an AC VTVM and an oscilloscope across dummy load.
2. Feed a 1,000 cycle signal into the HI Z input and adjust signal level to point where clipping occurs. This provides slightly over full rated output of amplifier as measured with AC VTVM.
3. The BALANCE ADJUSTMENT control is located on top of chassis adjacent to output tubes, and is a screwdriver adjustment. Rotate this control to position which provides equal clipping on oscilloscope.

NOTE: *If a distortion analyzer is available, this should be used in preference to oscilloscope. In this case, a distortion reading of approximately 1 percent or less should be measured at full output, provided everything else in amplifier is operating properly.*

For field service, where test equipment is not available, set balance control to approximately center position.

IF TROUBLE OCCURS

If trouble ever develops with your unit, please do not hesitate to ask our advice or assistance. We are interested in your Bogen unit for as long as you have it. Information can be obtained by writing to: Service Department, Bogen Communications, P. O. Box 500, Paramus, New Jersey.

When communicating with us give the model number and series number of your unit. Completely describe the difficulty encountered, and the effect each operating control has upon the symptoms of trouble. Include details on electrical connections to associated equipment and list such equipment.

When we receive this information we will send you service information if the trouble appears to be a simple one which can be connected by replacing tubes or changing connections. If trouble requires servicing, we shall send you the name and address of the nearest Bogen authorized service agency to which you can send your unit for repair.

When shipping your unit, pack instrument well using filler material to prevent damage in transit. Send unit, fully insured and prepaid, via railway express. Do not ship via parcel post unless so instructed. The unit will be promptly repaired and returned to you via express collect.

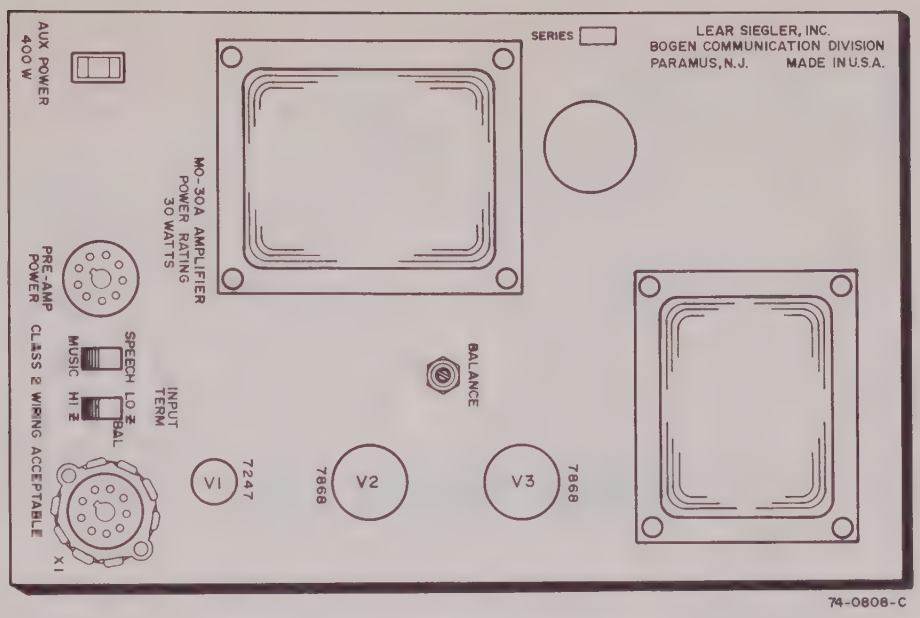

FIGURE 4 – TOP VIEW OF CHASSIS

REPLACEMENT PARTS

The components used in the BOGEN model MO30A amplifier; with exception of items listed below, are standard parts available through all reputable parts jobbers. However several parts are custom-made to strict BOGEN specifications and should be replaced only with genuine BOGEN parts. These custom-made parts are listed here and are available through BOGEN distributors, service agencies or direct from the factory.

When ordering parts specify part number and description as indicated below, and give the model and series number of the equipment.

Ref. No.	Part No.	Description
C7	79-001-058	Capacitor, Electrolytic, 100 mfd, 50 V
C8	79-001-117	Capacitor, Electrolytic, 40 mfd, 350 V
C9	79-010-051	Capacitor, Electrolytic, 40/350, 40/450, 10/400
CR1	96-5109-01	Diode, Silicon
CR2	96-5096-01	Diodes, Silicon, Doubler
R1	77-001-275	Control, Volume, Screw Driver Adj.
R2	75-235-122	Resistor, 1.2 K, ½ w, 2%
R5	75-235-223	Resistor, 22 K, ½ w, 2%
R6	75-235-223	Resistor, 22 K, ½ w, 2%

Ref. No.	Part No.	Description
R10	77-001-563	Control, Balance, Screw Driver Adj.
R11	75-235-623	Resistor, 62 K, ½ w, 2%
R13	75-235-563	Resistor, 56 K, ½ w, 2%
R14	75-235-223	Resistor, 22 K, ½ w, 2%
R15	75-235-433	Resistor, 43 K, ½ w, 2%
R16	75-552-152	Resistor, 1.5 K, 4 w
R17	75-742-511	Resistor, 6.8 ohms, ½ w, W.W.
SW1	81-003-016	Switch, Input Selector
SW2	81-003-016	Switch, Speech-Music
SW3	81-002-098	Switch, Power
T1	83-673-000	Transformer, Power
T2	83-369-000	Transformer, Output

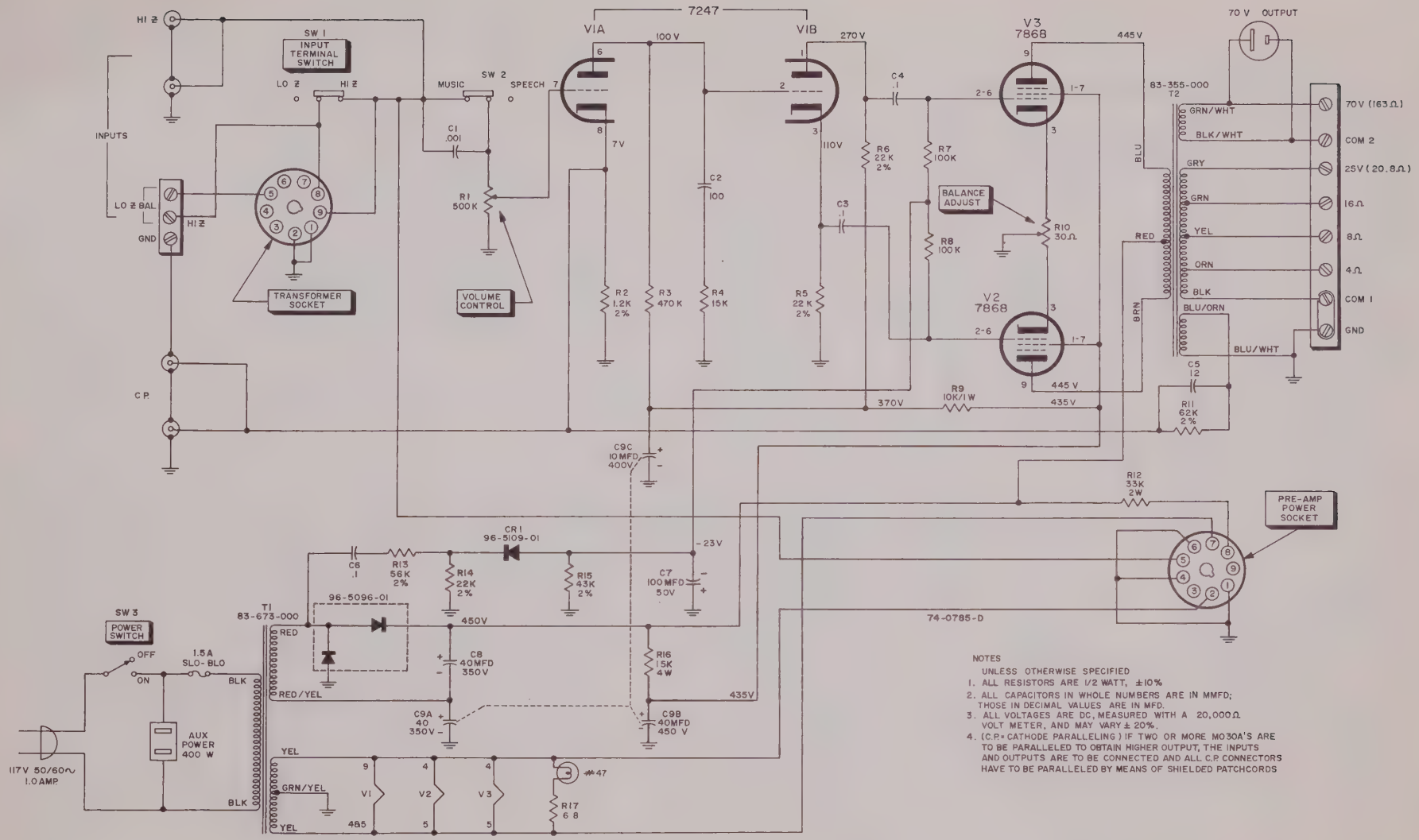

NOTES
UNLESS OTHERWISE SPECIFIED

1. ALL RESISTORS ARE 1/2 WATT, ±10%
2. ALL CAPACITORS IN WHOLE NUMBERS ARE IN MMFD; THOSE IN DECIMAL VALUES ARE IN MFD.
3. ALL VOLTAGES ARE DC, MEASURED WITH A 20,000Ω VOLT METER, AND MAY VARY ± 20%.
4. (C.P.= CATHODE PARALLELING) IF TWO OR MORE MO30A'S ARE TO BE PARALLELED TO OBTAIN HIGHER OUTPUT, THE INPUTS AND OUTPUTS ARE TO BE CONNECTED AND ALL C.P. CONNECTORS HAVE TO BE PARALLELED BY MEANS OF SHIELDED PATCHCORDS

FIGURE 5 -- MODEL MO30A SCHEMATIC DIAGRAM

WARRANTY

The Bogen equipment which you have just purchased has been carefully tested and inspected before leaving our factory. When properly installed and operated in accordance with instructions furnished, it should give excellent performance and reliable operation.

Bogen equipment is guaranteed against all defects in material and workmanship for one year from date of sale to the original purchaser. Any part of the equipment which, under normal installation and use, becomes defective will be repaired or replaced by us, provided it is returned for our examination, transportation prepaid, to our factory (or authorized service station). This warranty does not apply to equipment which has been subjected to abuse or accident, or which has been altered in any way; nor does this warranty extend to transistors, vibrators, or accessories, etc., not of our own manufacture and which are separately covered by the producing manufacturer's warranty,

The registration card enclosed with the equipment must be filled out and mailed to us within 5 days of purchase to place the warranty in effect.

LEAR SIEGLER, INC.
BOGEN COMMUNICATIONS DIVISION
P.O. BOX 600
PARAMUS, NEW JERSEY

PRINTED IN U.S.A.
3-65 B

54-5273-01

PRELIMINARY

INSTRUCTION MANUAL

FOR

REGULATED POWER SUPPLIES

MODEL LA 20-05B-1314

LAMBDA ELECTRONICS CORP. MELVILLE, L. I., NEW YORK

ADDENDA

MODEL LA 20-05B-1314

The paragraphs of this insturction manual apply in general to the above model.

This modified unit differs from a standard unit in the following ways:

1. A special paint finish has been applied to the front panel.
2. Black oxide handles have replaced the standard bright nickel finish handles.
3. A 1/16" shim is welded to the front panel edges to simulate a 3/16" panel thickness.
4. Slides provided by Ling are mounted on both sides of the chassis.

SPECIFICATIONS AND FEATURES

Specifications apply for both the unmetered model LA 20-05B and the metered model LA 20-05BM.

DC OUTPUT -- Regulated for line and load

Voltage Range	20-105 volts DC (in 16 continuous overlappling bands)
Voltage Range Bands	20-30, 25-35, 30-40, 35-45, 40-50 45-55, 50-60, 55-65, 60-70, 65-75 70-80, 75-85, 80-90, 85-95, 90-100 95-105
Current Range	0-2 amperes (for entire voltage range)
Regulation (line)	Better than (0.05) percent for input variations from 105-140 VAC
Regulation (load)	Better than (0.10) percent for load variations from 0 to full load
Transient Response (line)	Output voltage is constant within regulation specifications for step-function line voltage change from 105-140 VAC or 140-105 VAC
Transient Response (load)	Output voltage is constant within regulation specifications for step-function load change from 0 to full load or full load to 0 within 50 microseconds after application
Internal Impedance	Less than 0.06 ohm
Ripple and Noise	Less than 1 millivolt rms with either terminal grounded
Polarity	Either positive or negative terminal may be grounded
Temperature Coefficient	Within 0.025%/°C of output voltage

AMBIENT TEMPERATURE AND DUTY CYCLE -- Continuous duty at full load up to 50°C (122°F) ambient

AC INPUT -- 105 - 140 volts AC, 60±0.3 cps* 390 watts**

* This frequency band amply covers standard commercial power lines in the United States and Canada.

** With output loaded to full rating and input at 140 VAC

OVERLOAD PROTECTION

Electrical	Magnetic circuit breaker, front panel mounted. Unit cannot be injured by short circuit or overload.
Thermal	Thermostat, manual reset, rear of chassis. Thermal overload indicator light, front panel.

INPUT AND OUTPUT CONNECTIONS -- Heavy duty barrier terminal block, rear of chassis.

METERS -- Voltmeter and ammeter on metered models

CONTROLS

DC Output Controls	Voltage band switches and adjustable VERNIER control, rear of chassis.
Power	Magnetic circuit breaker, front panel.
Remote DC Vernier	Provision is made for remote operation of DC vernier.
Remote Sensing	Provision is made for remote sensing to minimize effect of power output leads on DC regulation.

PHYSICAL DATA

Mounting	Standard 19" rack mounting.
Size	3-1/2"H x 19"W x 14-3/8"D
Weight	55 lbs. net, 85 lbs. shipping wt.
Panel Finish	Black ripple enamel (standard). Special finishes available to customer's specifications at moderate surcharge.

CONTROLS, INSTRUMENTS AND FUSES

ON-OFF Circuit Breaker.

The ON-OFF circuit breaker, located on the front panel, controls application of input power to the supply. Overload of the supply causes the breaker to trip. When the breaker is in the ON position the POWER ON indicator lamp glows.

Output Voltage Controls.

1. Range Switches. Range switches S1, S2, S3, and S4, together with the VERNIER, select the DC operating voltage band. The DC output voltage (VDC) is the summation of these voltages.

$$VDC = 20 + S1 + S2 + S3 + S4 + Vernier$$

Set the switches and VERNIER to the positions listed in table 1 for the particular operating voltage range.

Table 1 Selection of Operating Voltage

Range VDC	Switch Positions S1	S2	S3	S4	VERNIER Position
20-30	0	0	0	0	0-10
25-35	5v	0	0	0	0-10
30-40	0	10v	0	0	0-10
35-45	5v	10v	0	0	0-10
40-50	0	0	20v	0	0-10
45-55	5v	0	20v	0	0-10
50-60	0	10v	20v	0	0-10
55-65	5v	10v	20v	0	0-10
60-70	0	0	0	40v	0-10
65-75	5v	0	0	40v	0-10
70-80	0	10v	0	40v	0-10
75-85	5v	10v	0	40v	0-10
80-90	0	0	20v	40v	0-10
85-95	5v	0	20v	40v	0-10
90-100	0	10v	20v	40v	0-10
95-105	5v	10v	20v	40v	0-10

2. VERNIER Control. This potentiometer varies the DC voltage over a range of 10 volts in each of the voltage bands. Clockwise rotation results in increasing voltage.

Thermostat and THERMAL OVERLOAD Indicator.

The manual reset-type thermostat is located on the rear deck. The thermostat opens when the temperature of the supply exceeds

Thermostat and THERMAL OVERLOAD Indicator (cont'd)

a maximum safe value. Input power is removed when the thermostat opens. The power supply must cool down for operation to be restored. Opening of the thermostat causes the THERMAL OVERLOAD indicator on the front panel to glow and the POWER ON light to extinguish. When proper temperature is reached, depress the manual THERMAL OVERLOAD RESET button to restore operation.

Connection Terminals.

Make all connections to the supply at the terminal block on the rear deck. Apply input power through the line cord or directly to terminals 1 and 2 if the line cord is removed. The supply positive terminal is brought out to terminals 3 and 4. The supply negative terminal is brought out to terminals 6 and 7. Recommended wiring of the power supply to the load and selection of wiring is shown in figures 1 through 6. Selection of the proper wiring is made on the basis of load requirements.

NOTE: Follow instructions for wiring supply to load.

Current Overload. (See ON-OFF circuit breaker)

The circuit breaker monitors the DC output current of the supply. A load current in excess of rated value or a short circuit causes the breaker to trip. The breaker can be placed back into operation immediately after removing the overload condition.

OUTPUT VOLTAGE Meter.

A 0-110 volts DC voltmeter, monitors the voltage at the output terminals of metered units.

OUTPUT CURRENT Meter.

0-2 ampere DC ammeter, monitors the load output current of metered units.

Fuses

"Slo-Blo" fuse F1, located on the rear deck, protects the AC input circuit and is rated at 8 amperes. Overload of the supply causes the circuit breaker to trip and does not cause fuse failure.

CAUTION

As a safety precaution, when the power supply is turned off for testing or servicing, discharge the internal electrolytic capacitors by briefly connecting a 100-ohm, 10-watt resistor across the output terminals (3 and 7) of the power supply.

POWER SUPPLY TO LOAD WIRING

The output impedance, regulation, and transient response of each power supply is so small that connecting leads of practical length can measurably effect these parameters at the load. Provisions have been made to overcome or to minimize the effects of these connecting leads.

The effect of the connecting leads and recommended methods of hookup to the power supply are shown in figures 1-6.

Figure 1 shows the connecting "Cable Voltage Drop per Ampere" versus "Cable Length" for the simple "2-Wire Connection."

Figure 2 shows the connecting "Cable Voltage Drop per Ampere" versus "Cable Length" for the "Improved 2-Wire Connection."

Figure 3 defines the separation distance from load to power supply.

Figure 4 illustrates the "2-Wire Connection." This is the simplest hookup and is suitable for most applications where extremely close load regulation and fast transient response over full-rated current excursion are not required.

Figure 5 illustrates the "Improved 2-Wire Connection." The number of terminals provided permit, in a practical way, the use of paralleled heavy gage leads. If the leads are not unduly long, this hookup yields excellent regulation and transient response.

Figure 6 illustrates the "4-Wire Connection." This hookup provides complete compensation for the connecting cable DC voltage drop. In addition, this connection provides good transient response for slow changes of load current.

When load current changes are rapid and good transient response is required together with remote sensing, consult the Lambda Engineering Department for recommended connections.

PROGRAMING AND CONSTANT CURRENT OPERATION

For programmed operation and constant current operation contact the Lambda Engineering Department for pertinent details.

GROUND CONNECTIONS

The power supply can be operated under the following conditions:

1. With negative terminal grounded
2. With positive terminal grounded
3. With neither terminal grounded

Proper connections for operating with either terminal grounded are shown in figures 4 through 6.

> NOTE: When operating the power supply with neither terminal grounded, high impedance leakage resistance and capacitance paths exist between the power supply circuitry and chassis ground.

REMOTE DC VERNIER CONTROL

The supply may be operated with remote DC Vernier control. Proper connections are shown in figures 4 through 6.

SERIES OPERATIONS

For operation of two (2) or more power supplies, of equal or unequal rating, in series, clamping diodes of suitable rating must be used across each of the power supplies to prevent reverse voltage from appearing across any of the individual supplies. This reverse voltage can appear under certain operating conditions and cause damage to the electrolytic output capacitors. Contact the Lambda Engineering Department for recommended diode rating and for other special application information.

VOLTAGE RATING (output terminals to chassis)

A maximum of 200 volts may be inserted between either the +DC or -DC terminal and chassis grounded.

OPERATING PROCEDURE

1. Remove AC power input to the supply before connecting load to the supply.

2. Select the proper power supply-to-load wiring by referring to the supply-load wiring diagram, figures 1 through 6.

3. Connect power supply to load in accordance with the applicable wiring diagram.

4. Refer to table 1 and select the desired operating voltage band.

5. Position the ON-OFF circuit breaker to the ON position to apply AC input power to the supply. Power supply is now operating at desired output voltage.

SAFETY NOTICE

DANGEROUS VOLTAGES EXIST IN THIS EQUIPMENT. OBSERVE THE USUAL SAFETY PRECAUTIONS WHEN OPERATING OR SERVICING THE EQUIPMENT TO AVOID SHOCK OR INJURY.

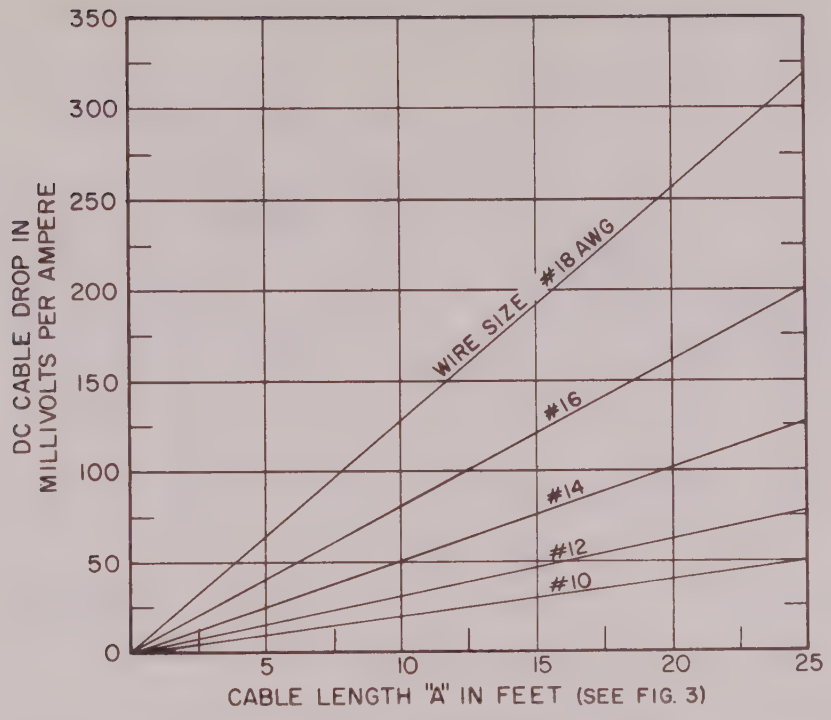

FIG.1. 2-WIRE CONNECTION (SEE FIG. 4)

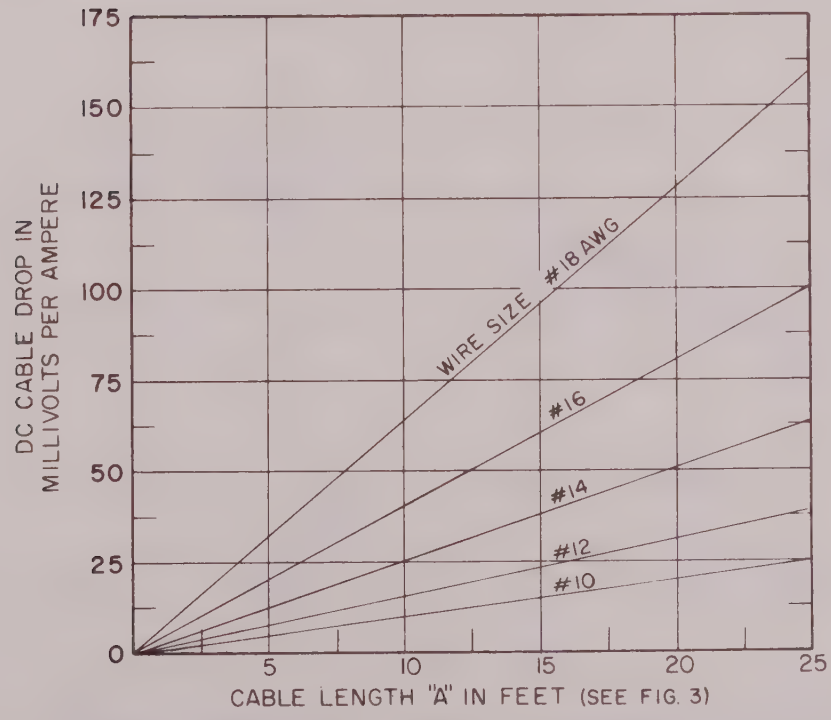

FIG. 2. IMPROVED 2-WIRE CONNECTION (SEE FIG.5)

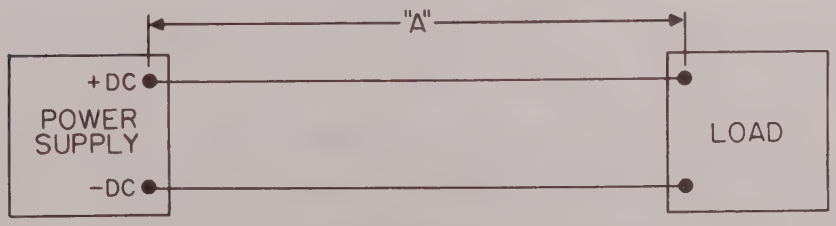

FIG. 3. CABLE LENGTH "A" IN FEET

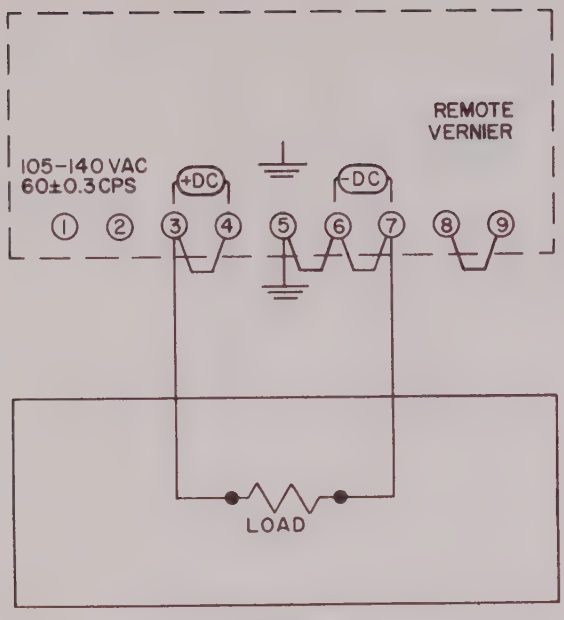

FIG. a
NEGATIVE TERMINAL GROUNDED

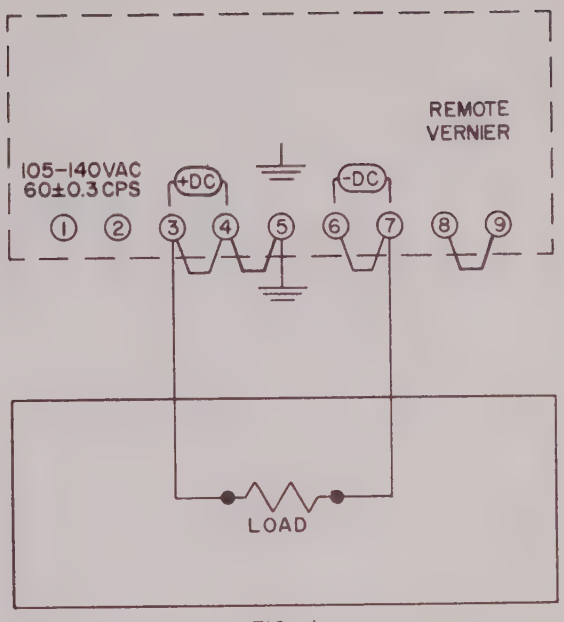

FIG. b
POSITIVE TERMINAL GROUNDED

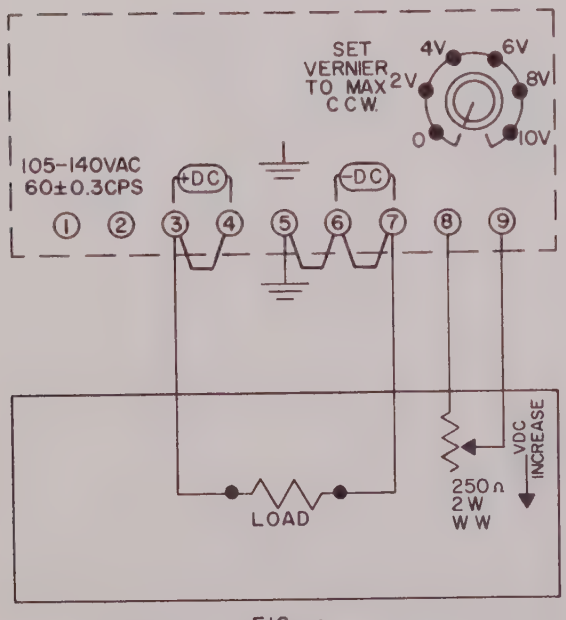

FIG. c
REMOTE DC VERNIER CONTROL
WITH NEGATIVE TERMINAL GROUNDED

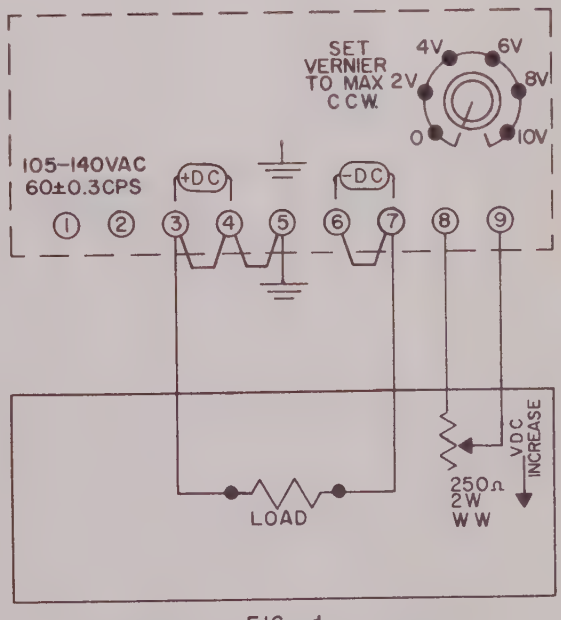

FIG. d
REMOTE DC VERNIER CONTROL
WITH POSITIVE TERMINAL GROUNDED

NOTE

SEE FIG.1 FOR SELECTION OF CONNECTING WIRE SIZE.

FIG.4. 2-WIRE CONNECTION

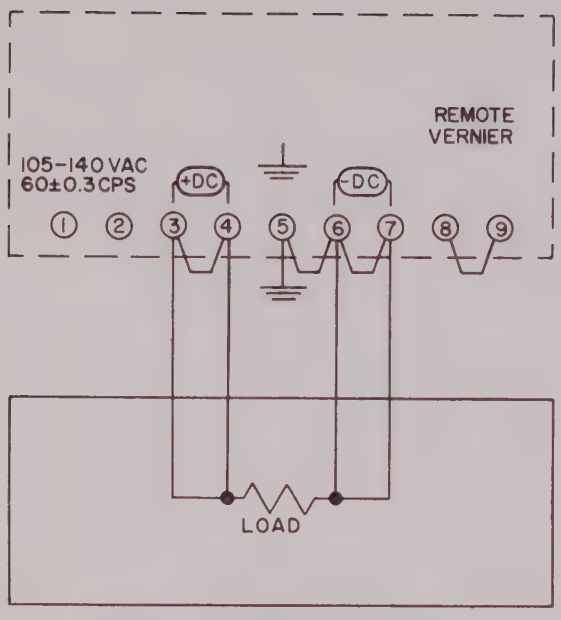

FIG. a
NEGATIVE TERMINAL GROUNDED

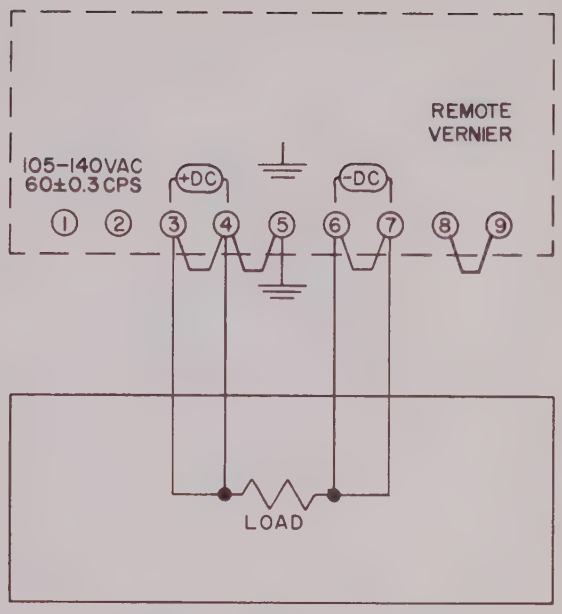

FIG. b
POSITIVE TERMINAL GROUNDED

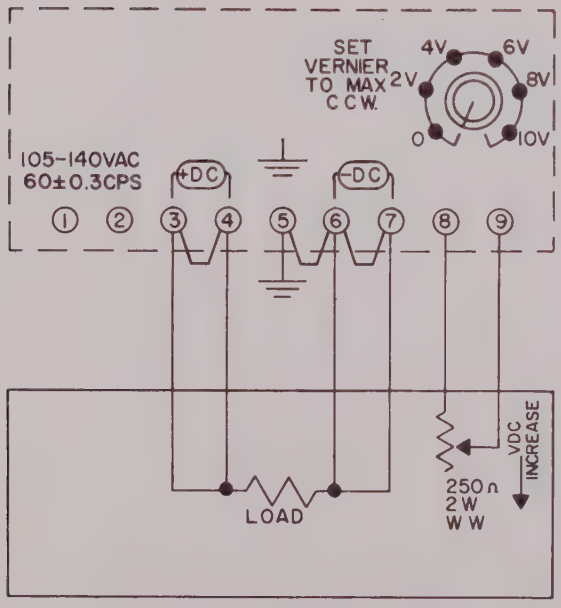

FIG. c
REMOTE DC VERNIER CONTROL
WITH NEGATIVE TERMINAL GROUNDED

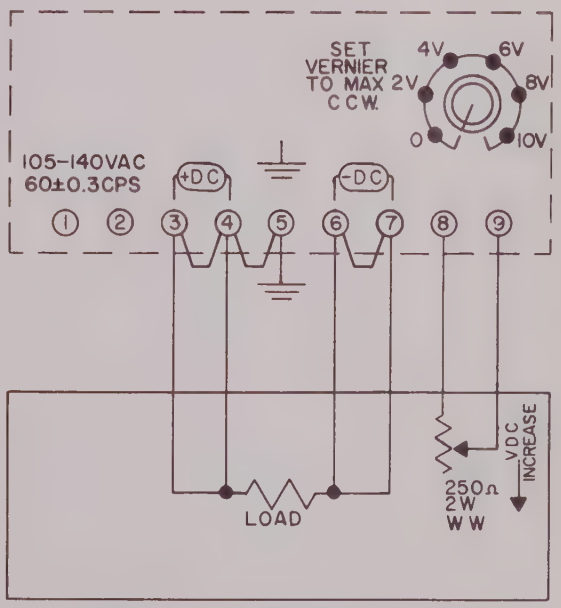

FIG. d
REMOTE DC VERNIER CONTROL
WITH POSITIVE TERMINAL GROUNDED

NOTE

SEE FIG.2 FOR SELECTION OF CONNECTING WIRE SIZE.

FIG. 5. IMPROVED 2-WIRE CONNECTION

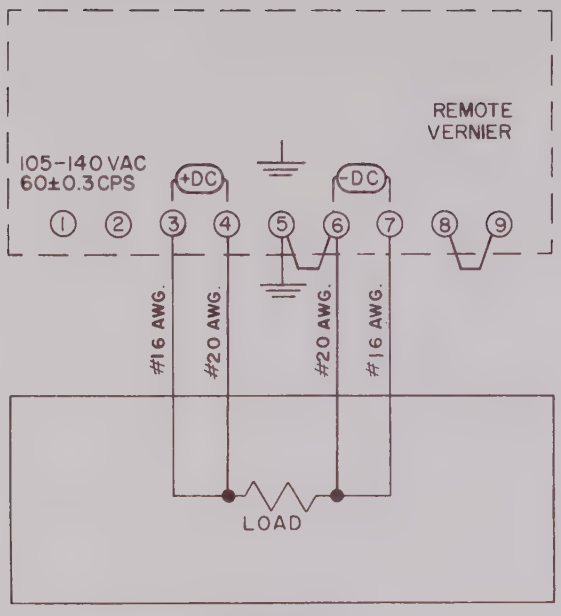

FIG. a
NEGATIVE TERMINAL GROUNDED

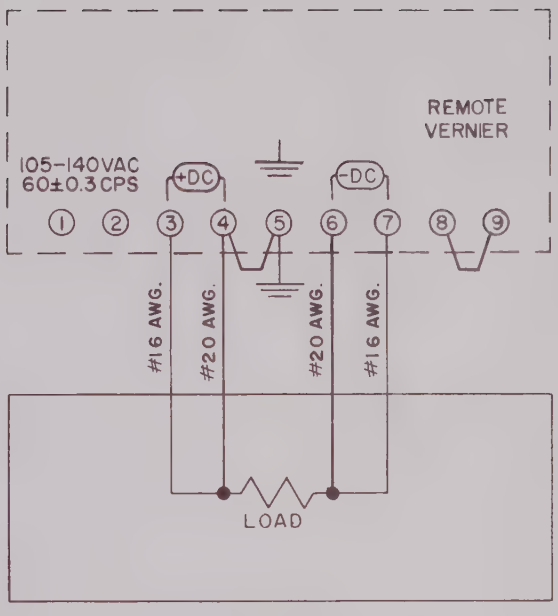

FIG. b
POSITIVE TERMINAL GROUNDED

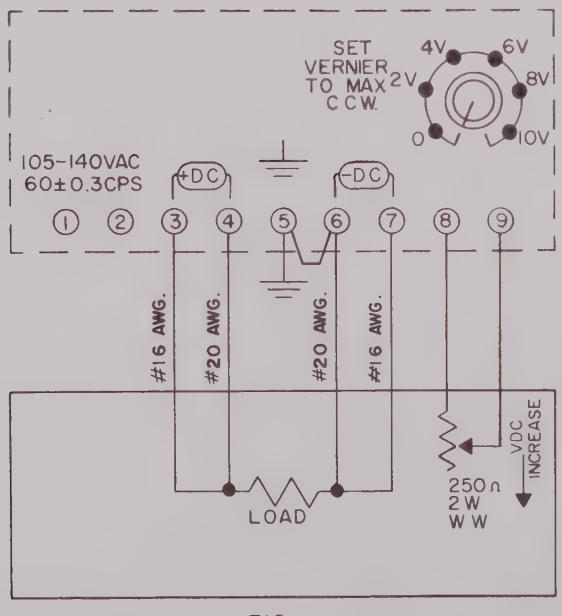

FIG. c
REMOTE DC VERNIER CONTROL
WITH NEGATIVE TERMINAL GROUNDED

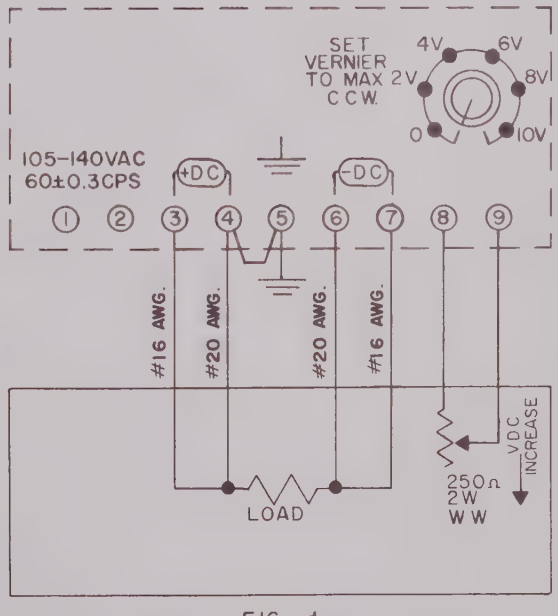

FIG. d
REMOTE DC VERNIER CONTROL
WITH POSITIVE TERMINAL GROUNDED

NOTE
WIRE SIZES SHOWN ARE MINIMUM.

FIG.6. 4-WIRE CONNECTION

SCB-20-05B-B

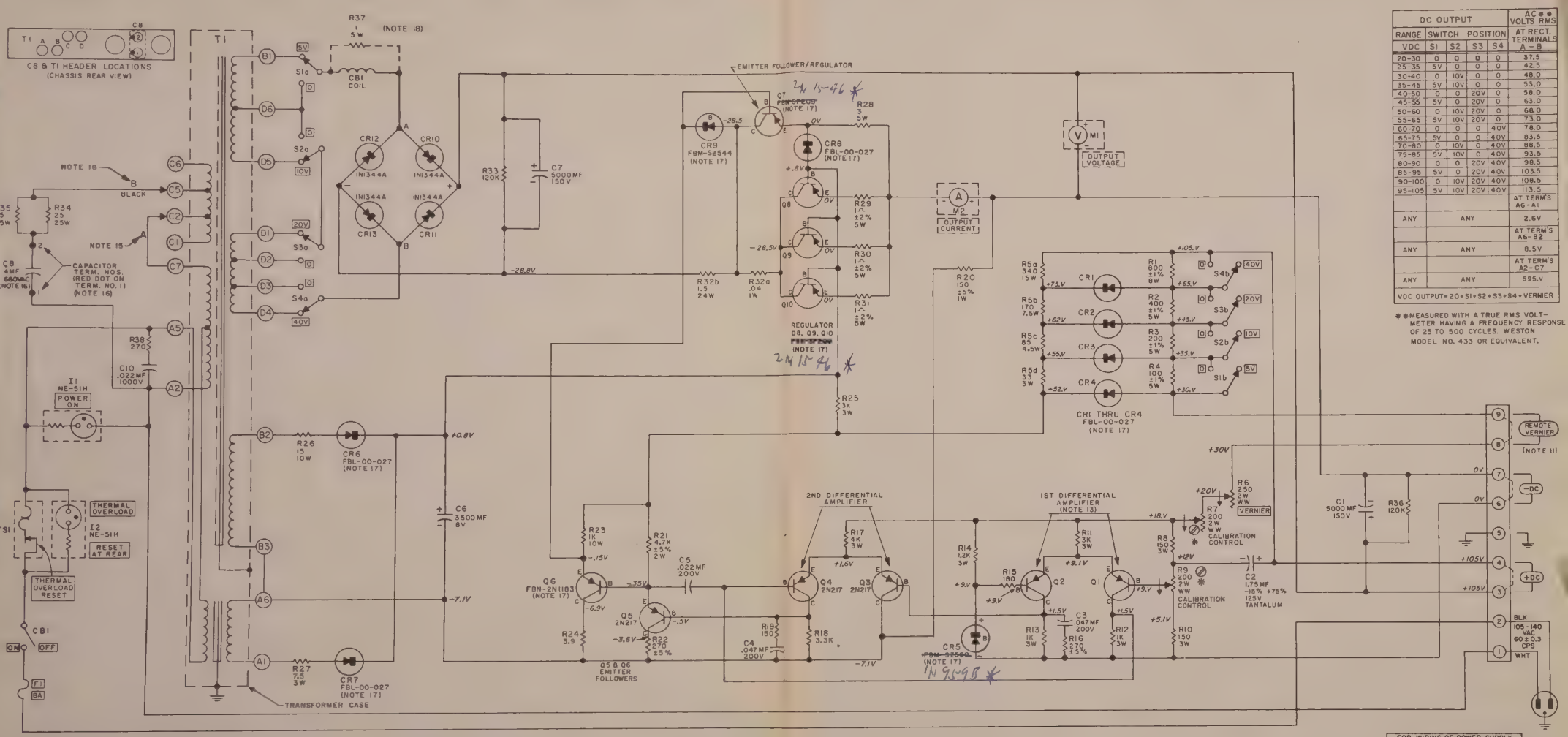

DC OUTPUT					AC ** VOLTS RMS
RANGE VDC	SWITCH POSITION S1	S2	S3	S4	AT RECT. TERMINALS A-B
20-30	0	0	0	0	37.5
25-35	5V	0	0	0	42.5
30-40	0	10V	0	0	48.0
35-45	5V	10V	0	0	53.0
40-50	0	0	20V	0	58.0
45-55	5V	0	20V	0	63.0
50-60	0	10V	20V	0	68.0
55-65	5V	10V	20V	0	73.0
60-70	0	0	0	40V	78.0
65-75	5V	0	0	40V	83.5
70-80	0	10V	0	40V	88.5
75-85	5V	10V	0	40V	93.5
80-90	0	0	20V	40V	98.5
85-95	5V	0	20V	40V	103.5
90-100	0	10V	20V	40V	108.5
95-105	5V	10V	20V	40V	113.5
					AT TERM'S A6-A1
ANY	ANY				2.6V
					AT TERM'S A6-B2
ANY	ANY				8.5V
					AT TERM'S A2-C7
ANY	ANY				595.V

VDC OUTPUT = 20+S1+S2+S3+S4+VERNIER

**MEASURED WITH A TRUE RMS VOLT-METER HAVING A FREQUENCY RESPONSE OF 25 TO 500 CYCLES. WESTON MODEL NO. 433 OR EQUIVALENT.

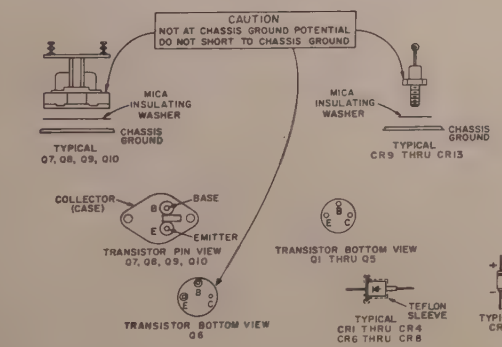

NOTES

1. WATTAGE RATING OF RESISTORS: 1/2 WATT, UNLESS NOTED.
2. TOLERANCE OF RESISTORS: COMPOSITION, ±10%; WIREWOUND, ±5%, UNLESS NOTED. ALL RESISTORS ABOVE 2 WATTS ARE WIREWOUND.
3. TOLERANCE OF CAPACITORS: ELECTROLYTIC, -0, +150%; PAPER, ±10%, UNLESS NOTED.
4. ↓ INDICATES CLOCKWISE ROTATION OF SHAFT.
5. ⏚ INDICATES CONNECTION TO CHASSIS.
6. ⊘ INDICATES SCREWDRIVER SLOT.
7. ≋ INDICATES FACTORY ADJUSTMENT, SEE INSTRUCTION MANUAL.
8. ◯ INDICATES TRANSFORMER HEADER TERMINAL.
9. ▭ INDICATES NOMENCLATURE AS ACTUALLY MARKED ON UNIT.
10. SWITCHES S1a,b, S2a,b, S3a,b, S4a,b, ARE DPDT TOGGLE SWITCHES.
11. FOR REMOTE DC VERNIER CONTROL SEE POWER SUPPLY TO LOAD WIRING DIAGRAMS IN INSTRUCTION MANUAL.
12. CONDITIONS OF VOLTAGE MEASUREMENT:
    A. INPUT: 125 VAC
    B. OUTPUT VOLTAGE: 105 VDC, OUTPUT CURRENT ZERO.
    C. INDICATED VOLTAGES ARE TYPICAL VALUES & ARE DC, UNLESS NOTED.
    D. MEASUREMENTS MADE USING 20,000 OHMS/VOLT METER BETWEEN "-DC" (TERM. #6 OR #7) & INDICATED POINTS, UNLESS NOTED.
13. THE INPUT DIFFERENTIAL AMPLIFIER (Q1 & Q2) UTILIZES A PAIR OF MATCHED TRANSISTORS WHICH SHOULD BE REPLACED AS A PAIR, OBTAINABLE FROM LAMBDA AS PART # FBN-2N2217MP. (COMPRISES MATCHED PAIR).
14. FUSE IS TYPE 3AG, "SLO-BLO".
15. CONNECTION "A" IS A PERMANENT FACTORY VOLTAGE ADJUSTMENT WHICH CONNECTS TERMINAL C7 TO ONE OF TERMINALS C1, C2, C5 OR C6 DO NOT REMOVE.
16. TERMINALS C1, C2, C5 & C6 ARE VOLTAGE ADJUSTMENTS FOR C8 CAPACITOR TOLERANCE. REPLACEMENT CAPACITOR IS LAMBDA PART NO. CAN-40-019.
17. CONNECT WIRE "B" AS FOLLOWS:

CAPACITOR TOLER. COLOR CODE ON TERMINAL #2	CONNECT WIRE "B" TO TERMINAL:
BLACK	C6
YELLOW	C5
GREEN	C2
BLUE	C1

17. DESIGNATIONS ARE LAMBDA PART NUMBERS.
18. RESISTOR R37 IS ONLY USED ON UNITS BEARING SERIAL NO. PREFIX A

FOR WIRING OF POWER SUPPLY TO LOAD REFER TO POWER SUPPLY-TO-LOAD WIRING DIAGRAMS

DOTTED CONNECTIONS ABOVE INDICATE JUMPERS IN PLACE FOR "2 WIRE CONNECTION"

THIS SCHEMATIC APPLIES TO UNITS BEARING SERIAL NO. PREFIX A & B

SCHEMATIC DIAGRAM
REGULATED POWER SUPPLY
MODEL LA 20-05B, LA 20-05BM

METERS INCLUDED IN "M" MODELS ONLY

LAMBDA
ELECTRONICS CORP.
MELVILLE, L. I., NEW YORK

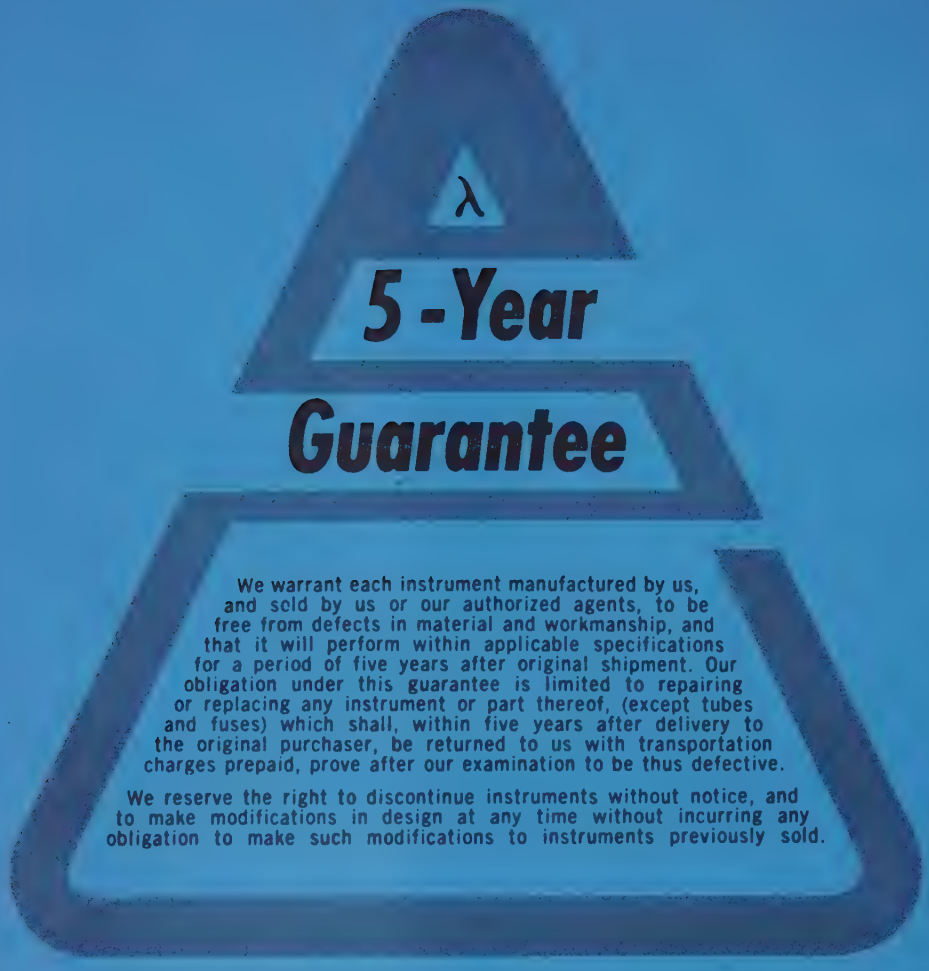

LAMBDA ELECTRONICS CORP.

MELVILLE, L. I., NEW YORK

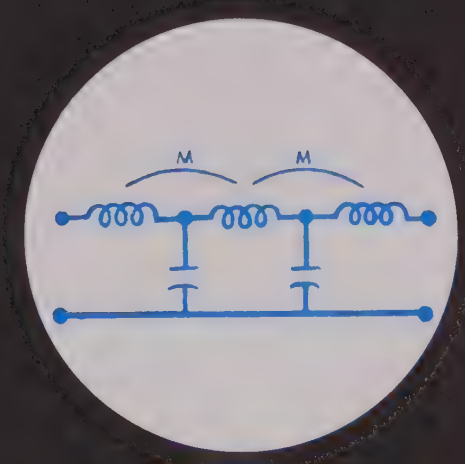

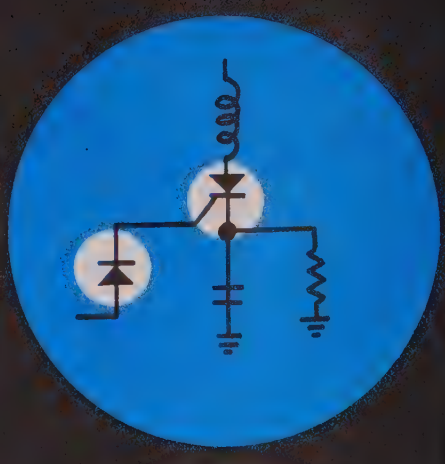

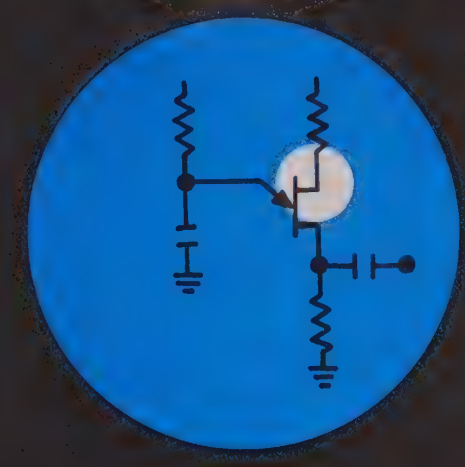

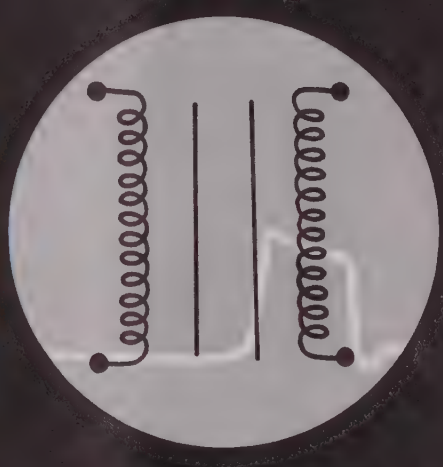

Valor
INSTRUMENTS, INC.

13214 CRENSHAW BOULEVARD, GARDENA, CALIFORNIA/FACULTY 1-2280

Valor
CAUTION
WARRANTY INVALID
IF INSTALLATION & TEST
PROCEDURE IN MANUAL
NOT FOLLOWED

INSTRUCTION MANUAL

POWER SUPPLY PS1130B

SERIAL NO. 2119

VALOR INSTRUMENTS INC. POWER SUPPLY MODULE

SPECIFICIATIONS
PS 1130 B

ELECTRICAL

INPUT:	115V ± 10%	60 CPS
OUTPUT VOLTAGE:	50 V ± 4%	Center tapped at
	50 VA (avg. of 1/2 cycle)	
REGULATION:	± 2% from 20% to full load	

OUTPUT FREQUENCY:	800 CPS ± 3% Square Wave
FREQUENCY STABILITY:	± 2% from 20% to full load

OVERLOAD PROTECTION:	Remote fuse connected between terminals 6 and 7.
AMBIENT TEMPERATURE:	50° C Maximum

MECHANICAL

SIZE:	5-1/4" x 3-5/8" x 12" excluding terminals and mounting studs.
MOUNTING:	Four (4) 10-32 tapped mounting holes are provided on each end of the module spaced 3-1/4" and 2-1/4" on centers arranged symmetrically about the module center lines.
TERMINALS:	Input, output, and fuse connections are by means of solder terminals on one end of the module.

OPERATING INSTRUCTIONS - PS 1130

The input and output to the PS 1130 are brought out on solder terminals at the end of the unit. The terminals are numbered as shown below.

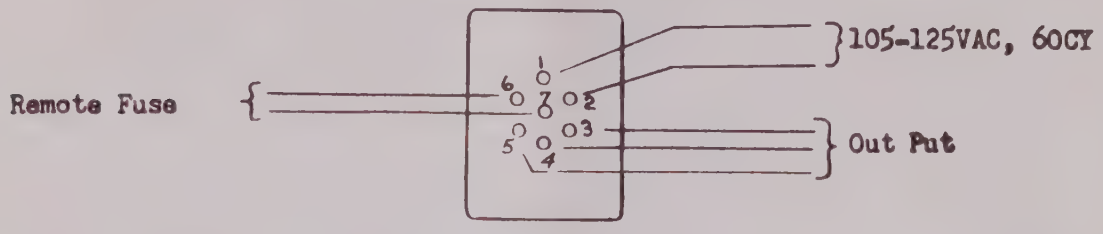

When 105-125VAC, 60 CPS is applied between terminals 1 and 2 a 50 VRMS, 800 cycle square wave will appear between the terminals 3 and 5.

The fuse, F1, protects the internal power supply that supplies the inverter circuitry. F1 connected between 6 & 7. (Remote)

THEORY OF OPERATION

The actual inverter circuitry consists of Q7, Q8, T1, T2, and associated circuitry. When power is first supplied to the circuitry, either Q7 or Q8 conducts. Then the action of the saturable core transformer T1 turns Q7 and Q8 alternately on and off causing a square wave to appear across the primary of T2 which is then coupled to the output of the unit. R11 adjusts the frequency of the inverter.

A very stable 20 volts is needed to supply the inverter circuitry. This 20 volts is supplied by an internal power supply in the following manner.

T3 steps the input voltage down to approximately 20 volts.AC. This voltage is then rectified by the bridge rectifier consisting of CR4 - CR7. C3 then filters the pulsating DC and supplies this voltage to the collector of Q1, the series regulator.

The resistor divider R8, R9, and R10 samples a portion of the 20 volt output and compares it to the five volts reference zener CR2. Any difference between these voltages is amplified by two differential amplifiers Q5 - Q6 and Q3 - Q4. The output of the Q3 - Q4 differential amplifier drives the power amplifier Q2 which, in turn, controls the series regulator Q1.

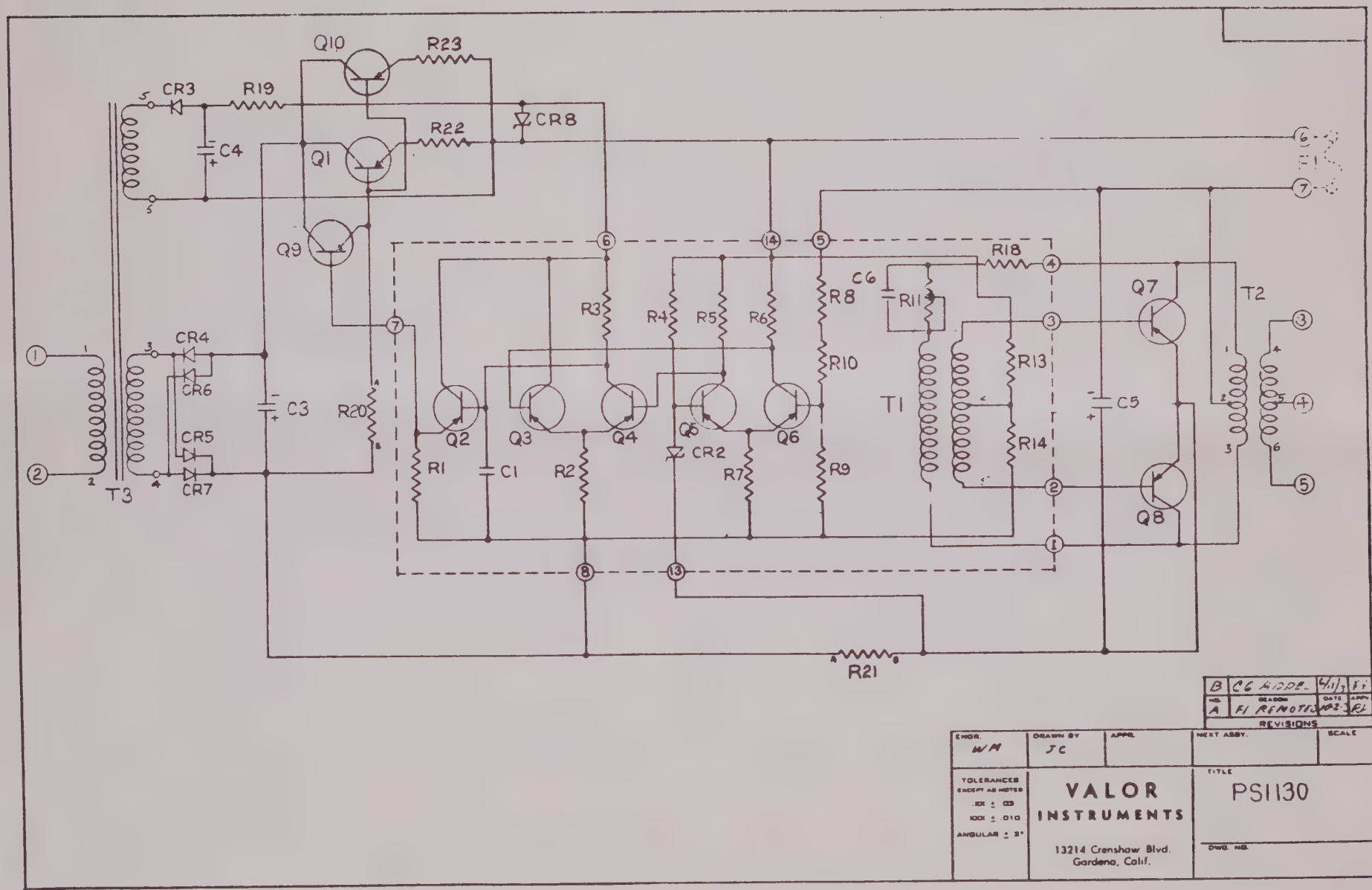
Q10
R23
CR3
R19
CR8
R22
C4
Q1
Q9
CR4
CR6
CR5
CR7
C3
R20
T3
R1
C1
Q2
Q3
Q4
Q5
Q6
R2
R3
R4
R5
R6
CR2
R7
R8
R9
R10
C6
R11
R18
T1
R13
R14
C5
Q7
Q8
T2
R21
B
C6 ADDED
NO.
REASON
DATE
APPR.
A
F1 REMOTES
REVISIONS
ENGR.
WM
DRAWN BY
JC
APPR.
NEXT ASSY.
SCALE
TOLERANCES
EXCEPT AS NOTED
.XX ± .03
.XXX ± .010
ANGULAR ± 2°
VALOR
INSTRUMENTS
13214 Crenshaw Blvd.
Gardena, Calif.
TITLE
PS1130
DWG. NO.

MASTER BILL OF MATERIAL FOR
PS 1130

SHEET 1 OF [illegible] REV

Notes & Part No	Part Name & Description	MFG	MFG Part No	Notes & Part No	Part Name & Description	MFG	MFG Part No
	Resistors						
R1	4.7K 1/2W 10%						
R2	4.7K 1/2W 10%						
R3	10K 1/2W 10%						
R4	1.5K 1/2W 10%						
R5	10K 1/2W 10%						
R6	10K 1/2W 10%						
R7	1.5K 2W 5%						
R8	2.7K 2W 5%WW						
* R9	1.4K 2W 5%WW						
*R10	100 ohm 1/2W 10%						
R11	500 Trimpot						
R12	Not Used						
R13	18K 1/2W 10%						
R14	100 ohm 2W 5%						
R15	Not Used						
R16	Not Used						
R17	Not Used						
* R18	200 2W 5%						
R19	1K 2W 5%WW						
R20	3.3K 1/2W 10%						
*R21	.1 ohm 3W WW						
R22	.1 ohm 3W WW						
R23	.1 ohm 3W WW						
	Capacitors						
C1	0.1 MFD 100VDC	C.D.	WMF1P1				
C2	Not Used						
C3AC	1000MFD 50VDC	C.D.	BR1000-50				
C3BD	1000MFD 50VDC	C.D.	BR1000-50				
C4	100 MFD 50VDC	C.D.	BR100-50				
C5	250 MFD 50VDC	C.D.	BR250-50				
*C6	.022MFD 100VDC	C.D.	WMF 1s22				
CR1	Not Used						
CR2	Zener Diode	Cont.Dev.	1N752				
CR3	Rectifier	RCA	1N 3253				
CR4	Rectifier	GE	4JA40A				

MASTER BILL OF MATERIAL FOR

PS 1130

SHEET 2 OF 2 REV

Notes & Part No	Part Name & Description	MFG	MFG Part No	Notes & Part No	Part Name & Description	MFG	MFG Part No
CR5	Rectifier	GE	4JA40A				
CR6	Rectifier	GE	4JA40A				
CR7	Rectifier	GE	4JA40A				
CR8	Zener Diode		IN 752				
	Transistors						
Q1	Transistor	Motorola	2N 1540				
Q2	Transistor	Philco	2N 2375				
Q3	Transistor	RCA	2N 404				
Q4	Transistor	RCA	2N 404				
Q5	Transistor MATCHED	RCA	2N 404				
Q6	Transistor MATCHED	RCA	2N 404				
Q7	Transistor	Motorola	2N 1542				
Q8	Transistor	Motorola	2N 1542				
Q9	Transistor	Motorola	2N 1540				
Q10	Transistor	Motorola	2N 1540				
T1	Transformer	Valor	PL84				
T2	Transformer	Valor	179A				
T3	Transformer	Valor	180A				
** F1	Fuse (Remote)	Litt.Fuse	3AG-3A-F/B				
	NOTES:						
	* Selected						
	** F1/supplied by Ling Electronics						
	Components may by equivalent to						
	those designated.						
	CIRCUIT BOARD		120301-B				

106904

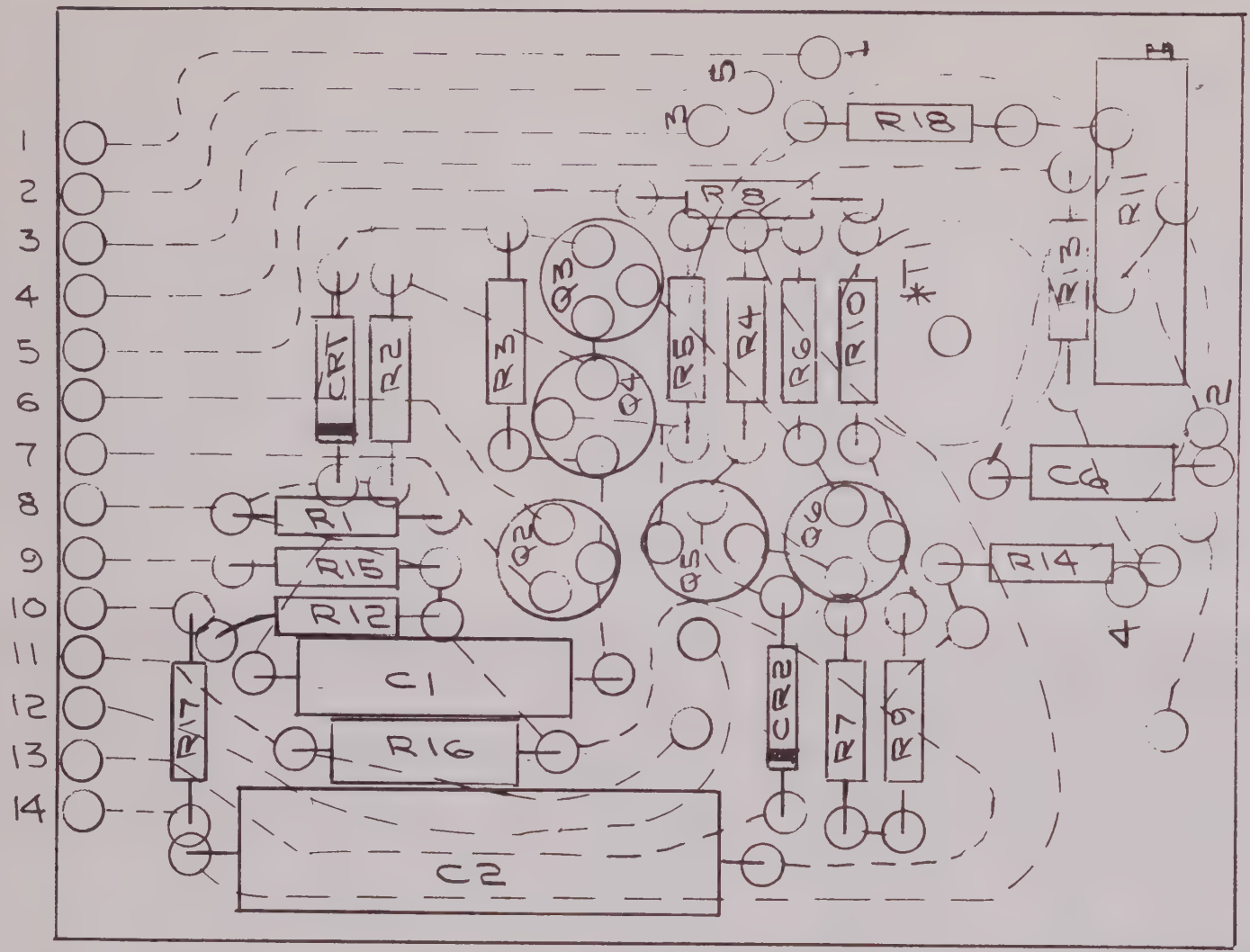

* T1 LOCATED ON CIRCUIT SIDE OF THE BOARD

PC BOARD # 120301-B

NO.	REASON	DATE	APPV.
B	ADDC6	9/7/65	TS

REVISIONS

ENGR.	DRAWN BY	APPR.	NEXT ASSY.	SCALE
TS	Hyatt	RM		

TOLERANCES EXCEPT AS NOTED
.XX ± .03
.XXX ± .010
ANGULAR ± 2°

VALOR INSTRUMENTS
13214 Crenshaw Blvd.
Gardena, Calif.

TITLE
P.C. LAYOUT
(PS1130-B)

DWG. NO.
106904

11. WARRANTY

Valor Instruments, Inc. warrants each instrument manufactured by them to be free from defects in material and workmanship. Our liability under this warranty is limited to servicing or adjusting any instrument returned to the factory for that purpose and to replace any defective parts thereof. This warranty is effective for 90 days after delivery to the original purchaser when the instrument is returned, transportation charges prepaid by the original purchaser, and when upon our examination it is disclosed to our satisfaction to be defective. Our warranty for this instrument is rendered void if the unit has been modified or used in any manner other than that specified, unless such changes have been made in accordance with instructions received from Valor Instruments, Inc. If the fault has been caused by misuse or abnormal conditions of operation, repairs will be billed at cost. In this case, an estimate will be submitted before the work is started.

If any fault develops, the following steps should be taken:

a. Notify Valor Instruments, Inc. giving full details of the difficulty and including the model number and serial number of the unit. Upon receipt of this information, we will send you servicing data or shipping instructions.

b. On receipt of shipping instructions, forward the instrument prepaid to Valor Instruments, Inc., 13214 Crenshaw Boulevard, Gardena, California, to the attention of the Service Department. If requested, an estimate of the charges will be made before the work begins, provided the instrument is not covered by the warranty.

12. SHIPPING

If the original carton and packing are not available, the instrument should be packed in a strong exterior container and surrounded by two or three inches of shock-absorbing material.

13. CLAIM FOR DAMAGE IN SHIPMENT

This equipment should be tested as soon as it is received. If it fails to operate properly, or is damaged in any way, a claim should be filed with the carrier. A full report of the damage should be obtained by the claim agent, and this report should be forwarded to us. We will then advise you of the disposition which is to be made of the equipment and arrange for repair or replacement.

14. PATENT NOTICE

Patents have been applied for on certain circuits used in this power supply. The buyer is not licensed to reproduce drawings nor to utilize the circuit or any part of the circuit without written permission from Valor Instruments, Inc.

DO NOT REMOVE
FROM FIELD OFFICE

9105-1 | C

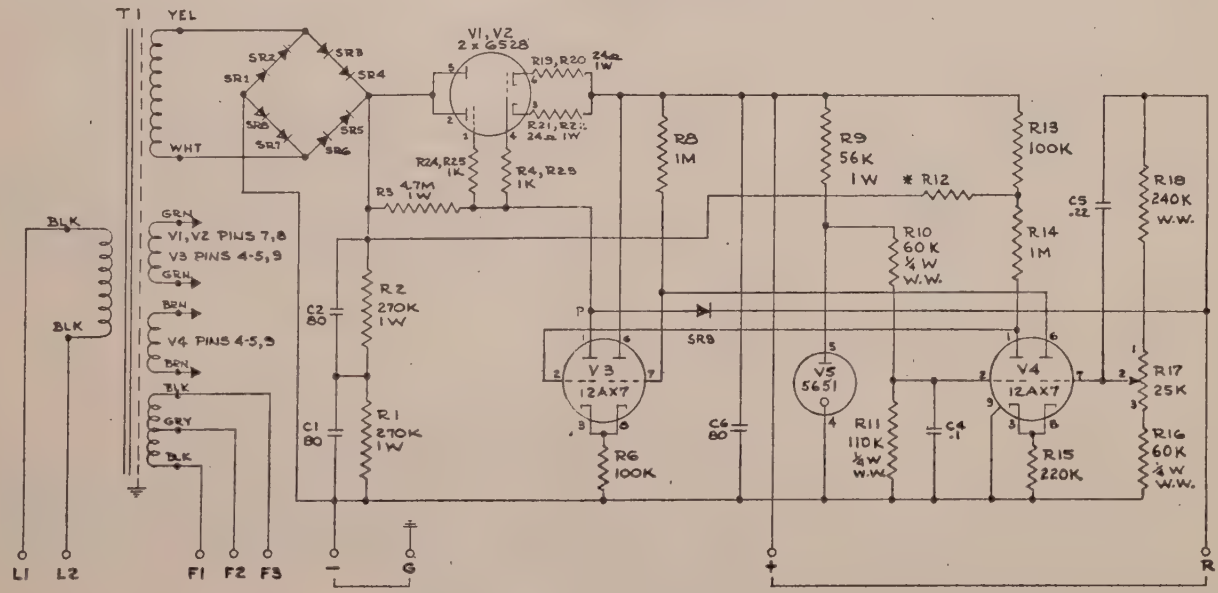

T1: ACDC # 9091
SR1-9 : 1N1695

INPUT: 105-125 VAC 50/60/400 CPS.
OUTPUT: 225-275 VDC @ 400 MA.
REGULATION: .05% NL TO FL, ± 10% LINE VOLTAGE.
RIPPLE: 1 MV RMS MAX.
FILAMENT OUTPUT: 6.3VAC @ 10 A.
ALL RESISTORS ½ WATT UNLESS NOTED.
* VALUE MAY VARY OR BE OMITTED.
P: CONNECT WHEN PARALLELING UNITS.

C	DIODE MODIFICATION	MC	12/1/61
		ARC	12/1/61

ACDC ELECTRONICS, INC.
BURBANK CALIFORNIA
SCHEMATIC RPM 400-250
DWG NO 9105-1 C

DESCRIPTION	NO.
Production Acceptance Test Procedure Model 120-15LR6-S1 Power Supply	QATP #311
	DATE ISSUE 3/29/66

1.0 Description

Input	100-130 VAC 60 cps
Output Voltage	6.3 VDC +0 -4% at 15.9 amp
Output Regulation	DC regulated line ±1% for input voltage range
Load Regulation	1/2 to full load 10% maximum
Ambient Temperature	20°C to 40°C

2.0 Nameplate Data

Model - 120-15LR6-S1

Serial Number _____*

Input Volts - 115 VAC 60 cycle

Output Volt - 6.3 VDC

Output Amp - 15.9 maximum

Phase - Single

* Starting @10,000

APPROVED BY				REV. DATE
		Engineering	Quality Control	

3.0 Terminals

Screw type - Insulated barrier.

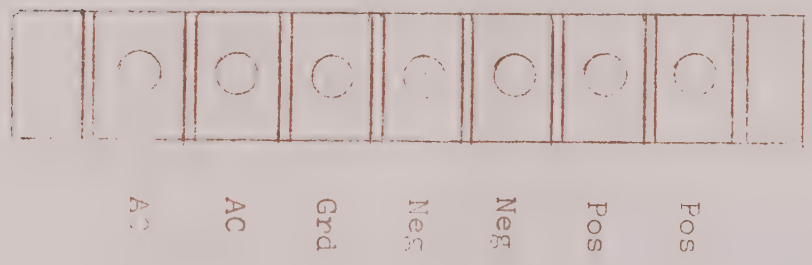

4.0 Purpose

To establish adequate electrical testing methods and procedures to assure product performance under normal environmental conditions.

5.0 Scope

This procedure contains those tests which are to be performed on 100% of production submitted to test for delivery to customer.

6.0 General

6.1 Equipment

Shall be of necessary accuracy and construction to demonstrate the performance of the equipment undergoing test.

6.2 Data

Test data sheets shall be maintained by Quality Control Test Department and provide permanent record of test acceptance or note any failures.

6.3 Completion of Testing

The unit shall be stamped with the Quality Control test stamp upon completion of test with no failures.

7.0 Procedure

7.1 Test Setup

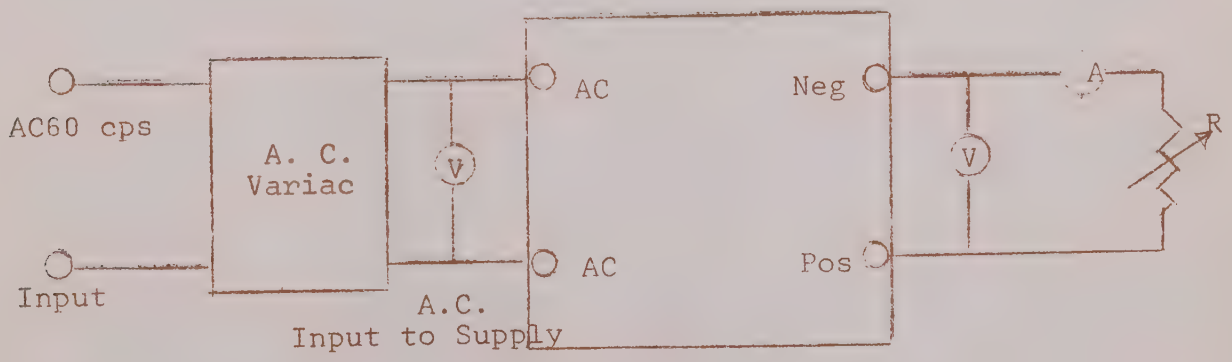

7.2 Preliminary Check

Step 1

Set AC input @ 115.0 volts 60 cps.

Step 2

Check output 6.3 VDC +0 -4% at 15.9 amp.

7.3 Variable Input Voltage Check

Step 1

Set input voltage to 100.0 VAC.

Step 2

Close switch and adjust load current to 15.9 amp. Check output voltage for 6.3 VDC +0 -4% operation.

Step 3

Repeat 7.3 Step 2 above except at 130.0 VAC input.

7.4 Line Regulation Test

Step 1

At 100.0 VAC input and 6.3 VDC +0 -4% output, adjust load to 15.9 ampere. (Keep load constant for remainder of test.) Record output voltage.

Step 2

Vary input to 130.0 VAC and record DC voltage output.

Step 3

Subtract output reading at 100.0 VAC from that of 130.0 VAC total. Total output change should not exceed 126 MV (±1% of 6.3 v).

7.5 Load Regulation Test

Step 1

At 115.0 VAC input and 6.3 VDC +0 -4% output, adjust load to 15.9 ampere. Keep input voltage constant for remainder of test.

Step 2

Record output voltage at full load.

Step 3

Reduce load and record output voltage at 7.9 amp condition.

Step 4

Subtract output reading at 115.0 VAC input at half load from that of full load. Total output change should not exceed 630 millivolt.

7.6 Ripple

With approved test instrument, check RMS ripple at 115.0 VAC input, 6.3 VDC +0 -4% voltage output at 15.9 amperes maximum.

TECH-STOK, INC.
ELECTRONIC DISTRIBUTOR
6061 WEST THIRD STREET
LOS ANGELES 36, CALIFORNIA
WEbster 7-0780

PARTS LIST TR121R POWER SUPPLY

SYMBOL	VALUE	ERA PART NO.
R1	5600 Ohm 1W	1597R
R2		
R3	1K 2W	1520R
R4		
R5	.5 ohm 5W Wire Wound	2776R
R6	47 ohm 2W	1373R
R7	1500 ohm 1/2W	1536R
R8		
R9	Select In Test - 1/2 Watt	
R10	680 ohm 3W WW	5357R
R11	2.7 Meg. 1/2W	1885R
R12	18K 1/2W	1650R
R13	12K 1/2W	7302R
R14	1K 1/2W	1518R
R15	56K 1/2W	1704R
R16	4700 ohm 1/2W	1587R
R17	680 ohm 1/2W	1496R
R18	560 ohm 1/2W	1487R
R19	Select In Test - 1/2Watt	
R20	150 ohm pot 2W WW	5921R
R21	500 ohm 3W WW	4186R

PARTS LIST TR121 R POWER SUPPLY Continued

SYMBOL	VALUE	ERA PART NO.
R22	1800 ohm 3W WW	5330R
R23	390 ohm 3W WW	5957R
R24	680 ohm 3W WW	5357R
R25		
CR1-8	F2	5882CR
CR11 & CR12	F2	5882CR
CR6	RT6	4453Z
CR9	15V	1174Z
Q1	2N1540	5535Q
Q3 - Q7	2N1193	3695Q
C1 - C9	50 mfd/15V	5927C
C2 - C8	25 mfd/50V	5753C
C7	.05 mfd/200V	5928C
C3	1250 mfd/55V	
T1	Transformer	5656XF

Note: WW = Wire Wound
All Resistors ±10% unless otherwise specified.

CODE TO MANUFACTURERS

A	ALTEC
AA	AIR ASSOCIATES
AB	ALLEN BRADLEY
AC	ASTRON CORPORATION
ACDC	ACDC ELECTRONICS
AD	ADVANCE RELAY
AD-YU	AD-YU LABS
ADEL	ADEL
ADL	ADLAKE
ADMS	ADAMS & WESTLAKE
AH & H	ARROW-HART & HEGEMAN
AI	AIRCRAFT
AIRM	AIR MARINE PRODUCTS
AJAX	AJAX CONDENSER
AL	ALLEN MFG.
ALB	ALBION
ALCO	W. D. ALLEN (ALLENCO)
ALL	ALLIS CHAMBERS
AM	AMATOM
AMC	AMSCO
AME	AMPERITE CO.
AMM	AMMON INSTRUMENTS INC.
AMP	AMPHENOL
AMPX	AMPEX
ANA	ANALOGUE CONTROLS
AP	AIRPAX ELECTRONICS
APH	ALPHA
API	AMERICANPAMCOR
APRX	AMPEREX
AQ	AEROQUIP
AR	AEROVOX
ARCO	ARCO ELECTRONICS
ARM	ARMSTRONG CORK CO.
AS	ASSOCIATED SPRING
ASP	ASSEMBLY PRODUCTS
ATLE	ATLEE
AU	AUGAT
AUTO	AUTOMATIC ELECTRIC
BAS	BASSICK
BC	BARBAR COLMAN
BECK	BECKMAN INSTRUMENTS
BEL	BELDEN
BEN	BENDIX
BG	BOSTON GEAR
BI	BIRNBACH
BIRT	BIRTCHER
BLY	BLILEY
BO	BODINE
BOU	BOURNS "TRIMPOT"
BOW	BOWERS
BP	BOGEN-PRESTO
BRE	BREEZE "AERO SEAL"
BRY	BRAYANT
BUD	BUD RADIO
BUCH	BUCHANAN
BUG	BUGGIE
BUR	BURROUGHS
BUSS	BUSSMAN MFG.
B & K	BRUEL & KJAER
C	CHATHAM
CA	CARLING ELECTRIC
CAL	CALIDYNE
CALC	CALIFORNIA CHASSIS
CALR	CALIF. RESISTOR CORP.
CAN	CANNON
CCI	CONTINENTAL CARBON, INC.
CD	CORNELL DUBILIER
CDM	CURTIS INDUSTRIES
CH	CHICAGO STANDARD TRANS.
CHA	CHATHAM ELECTRONICS
CHD	CROUSE HINDS
CHSH	CHASE-SHAWMUT
CI	CINEMA
CJ	CINCH-JONES
CK	CONROY & KNOWLTON
CL	CLARK CONTROLER CO.
CLAR	CLAROSTAT
CM	CMPUTER MEASUREMENTS
CMQP	CHEMQUIP
COR	CORNISH
CP	COMMUNICATION PROD.
CRA	CRAMER CONTROL
CRAF	CRAFTSMAN
CRIT	CRITTENDEN
CRL	CENTRALAB
CRN	CRANE
CT	CHASSIS TRAK
CTS	CH. TELE SUPPLY
CU	CURTIS
CUT	CUTLER HAMMER
D & H	D & H AWNING
DA	DAYTON
DALE	DALE
DECO	DEECO
DEFT	DEECO FELT
DELR	DELRY
DI	DIALITE CORP. (DIALCO)
DIC	DICKSON ELECTRONICS
DICO	DIAMOND MFG. (DICO)
DM	DIAMOND METAL
DOS	DOSSERT
DR	DELCO RADIO
DRAK	DURKEE-ATWOOD
DUC	DUCOMMON
DUM	DUMOND
DY	DYMEC
EC	ELECTRO CUBE
ECK	ECKTRONICS
ED	EDCLIFF INST.
EDEC	ELECTRO DEVELOPMENT CO.
EE	ELECTRONICS ENCLOSURES
EEW	ELECTRO ENG. WORKS
EF	ELECTRO FAB.
EI	EIMAC
EM	ELECTRO-MEASUREMENTS
ELCO	ELCO
ELDM	ELDEMA
ELME	ELMENCO
ELTC	ELECTRAC
EMC	EMCOR
EMEC	EMEC
EMP	EMPCO
ENDV	ENDEVCO
EP	ENGINEERING PROD.
ER	ERIE
ERA	ELEC. RESEARCH ASSOC.
ERC	ELECTRA RESISTOR CORP.
ES	EAGLE SIGNAL
ESCO	ELECTRO-SWITCH CORP.
ESNA	ELASTIC STOP NUT
ESX	ESSEX
EVER	EVEREST
F	FENWAL
FAN	FANSTEEL
FCHD	FAIRCHILD
FED	FEDERATED SEMICOND
FED-S	FEDERAL SCREW
FEI	FEDERAL ENTERPRISE, INC.
FF	FEDERAL FASTENING
FL	FLUKE, JOHN MFG.
FP	FISHER-PORTER
FR	FRANZ
FU	FULLER
GA	GATES
GAXY	GALAXY
GC	GENERAL CEMENT
GCON	GENERAL CONTROL
GDL	GOOD-ALL ELECTRIC
GE	GENERAL ELECTRIC
GEN	GENTRONICS
GLA	GEELAR
GL	GLOBAR
GNI	GENERAL INSTRUMENTS
GR	GENERAL RADIO
GRAY	GRAYBAR
GRHL	GRAYHILL
GRIS	GRIGSBY CO.
GS	GLASTIC
GU	GUDEMAN
GV	G. V. CONTROL
HAM	HAMMERLUND MFG.
HAW	HARTWELL
HAYS	HAYS MFG.
HE	HEINEMANN
HEY	HEYCO
HEYM	HEYMAN MFG.
HP	HEWLETT-PACKARD
HL	HELIPOT
HOF	HOFFMAN
HOP	HOPKINS
HS	HARDWARE SPEC.
HTD	HUDSON TOOL & DIE
HU	HUBBEL
HY	HYCOR
HYD	HAYDON
HZE	HEINZE
IEI	INT. ELEC. IND.
IERC	INT. ELEC. RESEARCH CORP.
IGNS	INGERSOL RAND
III	INT. INSTRU. INC.
IL	ILSCO
ILG	ILG
IMP	IMPERIAL
IND	INDIANA GENERAL
INSU	INSULINE
IRC	INT. RESISTOR CORP.
IREC	INT. RECTIFIER CORP.
IS	INSULATION SUPPLY
ITE	ITE CIRCUIT BREAKER
ITT	ITT (FEDERAL)
J	JOHNSON
JAN	JAN HARDWARD MFG.
JE	JEFFERSON
JEN	JENSEN
JNC	JANCO
JNG	JENNINGS
JON	JONATHAN MFG.
K	KEMET
KENR	KEINER
KH	KRON-HITE
KING	KING
KT	KOOLTRONIC
KU	KULKA
KZ	KURZ-KASCH
LA	LYNCH ASBESTOS
LAMB	LAMBDA
LAR	L. A. RESISTOR
LE	LEACH
LER	LERCO
LI	LITTLE FUSE
LING	LING ELECTRONICS DIV.
LMB	LMB
LP	LAPP
LPD	LA-DEAU PROD.
LUNK	LUNKENHEIMER
M	MILLEN
MA	MALLORY
MD	MICRODOT
ME	METTSCRAFT
MEC	MEC
MH	MINNEAPOLIS HONEYWELL
MICA	MICAMOLD
MIN	MINARIK
ML	MACHLETT
MLR.	MILLER CO.
MMN	MARMON
MN	MARION
MOD	MODULONICS
MON	MONITOR
MOR	MORENO
MOSE	MOSELEY
MOSS	MOSSMAN
MRC	MARCO
MRY	MURRAY
MS	MICROSWITCH
MTRO	MOTOROLA
N	NATIONAL CO.
NC	NATIONAL WIRE & CABLE
NE	NETWORK MFG.
NEI	NATIONAL ELEC. INC.
NEP	NATIONAL ELEC. PROD.
NEX	NEXAS RESEARCH LABORATORY
NHPB	NEW HAMP. BALL BEARING
NIBCO	NORTHERN INDIANA BRASS
NL	NATIONAL LOCK
O	OHMITE
OZ	O. Z. ELECTRICAL MFG. CO.
PACR	PACIFIC RESISTOR
PAN	PANDUIT
PANX	PANDUX
PC	POWER COMPONENTS
PCA	PCA
PE	PEERLESS
PENN	PENN CONTROL
PER	PERMOID
PERM	PERMALI
PH	PHILLIPS CON. (PHILTROL)
PHIL	PHILBRICK RESEARCH
PIC	PIC DESIGN
PREM.	PREMIER METAL PROD.
PRKR	PARKER ELECTRICAL INST.
PRYN	PRYNE
PTB	POTTER-BRUMFIELD
PULS	PULS ENGINEERING
PY	PYRAMID
QE	QUALITY ELECTRIC
R	ROTRON
RAY	RAYTHEON
RBC	RUBBERCRAFT
RCA	RADIO CORP. OF AMER.
RCC	RADIO CONDENSER CO.
RDL	RADIO DEVELOPMENT LAB
RE	REPUBLIC GLASS
REN	RENBRANDT
ROB	ROBERTSHAW-FULTON CON.
ROME	ROME
RT	RATIGAN
RY	RYTRON
S	SIMPSON
SA	SANGAMO
SAR	SARAN
SCN	SCANBE MFG. CORP.
SD	STRUTHERS-DUNN (DUNCO)
SE	SERVICE
SEA	SEASTROM
SEL	SELCO
SEM	SEMTECH CORP.
SEP	STANDARD ELECT. PROD.
SFTM	SAFE-T-MIKE
SH	SHALL CROSS
SI	SIGMA
SIE	SOUTHWESTERN IND. ENG.
SIG	SIGNAL
SKT	SARKES TARZIAN
SK	SPENCER-KENNEDY-LABS.
SM	STANLEY MORRIS
SMC	SPECIALTIES MFG.
SMI	H. H. SMITH
SN	SNAP-TITE
SOLA	SOLA ELECTRIC
SOR	SORENSON
SP	SPRAGUE
SPC	SPECTROL
SPR	SUPREME
SQ	SQUARE D
SR	SIERRA ELECT. CORP.
SREC	STANDARD RECTIFIER
SS	SPECTRA-STRIP
STAH	STAHLIN BROS.
STAN	STANTRON
STHC	SOUTH CO
STIM	STIMSON, E. B.
STW	STANDARD WIRE & CABLE
SU	SUPERIOR ELECTRIC
SUPT	SUPRENANT
SW	SWITCHCRAFT
SW-CT	SWITCHING CONTROL
SWGL	SWAGELOCK
SY	SYLVANIA
T	TRIAD
T & B	T & B (CONNECTORS)
TCC	TECHNO-COMPONENTS CORP.
TEM	TEMPLE
TH	THERMADOR
THR	THERMALOY CO.
TI	TEXAS INSTRUMENT
TIC	TECHNOLOGY INST. CORP.
TIM	TINNERMAN
TNG	TUNGSOL
TOR	TOR MFG.
TR	TRUMBEL
TRAN	TRANSELECTRONICS
TRE	TRERICE
TRIM	TRIMM
TRID	TRID LABS. INC.
TX	TEKTRONIX
UI	UNISTRUT
ULAN	ULANET CO., GEO.
UN	UNIMAX
USDC	U. S. ELECT. DEVEL.
USEC	U. S. ENG. CO.
USG	U. S. GAUGE
UTAH	UTAH
UTC	UNITED TRANSFORMER
VAL	VALOR INSTRUMENTS INC.
VEC	VECTOR ELECTRONICS
VEECO	VEECO
VIK	VIKING
VYR	VEYOR CORP.
WA	WALSCO
WAFD	WAKEFIELD ENGR.
WAT	WATERS
WB	WARNER BRAKE
WE	WESTINGHOUSE
WEL	WELWYN
WES	WESTON
WH	WAHLGREN
WHD	WEATHERHEAD
WHIT	WHITLOCK
WIN	WINCHESTER
WK	WECKESSER
WL	WARD LEONARD
WP	WESTCAP
WRMD	WIRE MOULD
WRNE	WESTERN ELECTRIC
WSPT	WESTPORT
WYCO	WYCO METAL PROD.
YO	YOUNG RADIATOR

ENGINEERING PARTS LIST

DATE ______ PAGE 1 MANUAL ______
REV. P CONT'D ON 2 REQUISITION NO. ______

ASDE-40	141	43137	ACCOUNT NO.

				Part Number	Description	MFG Code	Manufacturer Part Number					
				31679	Layout, ASDE-40			-	-			
				33364	Cabinet Assembly			-	-			
					Meter Range Selector	LING	MR-40B	1	1			
					Mode Selector	LING	CM-40B	1	1			
					Selector Switch	LING	SSM-50B	1	1			
					Control Panel	LING	CP-10B	1	1			
					Equalizer Panel	LING	SE-40A	1	1			
					Power Distribution Panel	LING	PD-10B	1	1			
		3			Meter Amplifier Card	LING	AMD-10	45	45			
					Meter Amplifier Card	LING	AMD-11	1	1			
					Low Frequency Equalizer	LING	5LF-40A	1	1			

*R.S. - RECOMMENDED AS CUSTOMER SPARES

DEPARTMENT | ISSUED BY | ISSUE DATE

LING ELECTRONICS — LING-TEMCO-VOUGHT INC

ENGINEERING PARTS LIST

DATE _____ PAGE 2 MANUAL _____

REV. _____ CONT'D ON 3 REQUISITION NO.

MODEL OR ASSY.	SERIAL NO.	SHOP ORDER	PON	QTY.	ACCOUNT NO.	M-DAY	DA
ASDE-40							

REV.	ITEM NO.	*R.S.	SYMBOL DESIG.	STOCK DWG NUMBER	DESCRIPTION	MFG CODE	MANUFACTURER PART NUMBER	QTY. ASSY.	QTY. UNIT	D P	KARDEX	PURCH ORDE
					Dual Noise Generator	LING	GRN-200B	1	1			
					Pre-Amplifier	LING	PA-2	1	1			
				PS-10942	Meter Assembly			1	1			
				33283	Marker Strip (Ref. PS-10942)			1	1			
					Power Supply Assembly	LING	APS-10A	1	1			
					Driver Amplifier	LING	A-10	1	1			
					Power Supply (Per drawing 21066)	LAMB	LA-20-05-B	1	1			
				PS-10750	Power Supply (Per drawing 21155)			1	1			

*R.S. - RECOMMENDED AS CUSTOMER SPARES

DEPARTMENT | ISSUED BY | ISSUE DATE

LING ELECTRONICS LING-TEMCO-VOUGHT INC

ENGINEERING PARTS LIST

DATE 9-3-65 PAGE 3 MANUAL
REV. L INITIAL 3.1 REQUISITION NO.

MODEL OR ASSY.	SERIAL NO.	SHOP ORDER	FON	QTY.	ACCOUNT NO.	MO-DAY	DATE
Cabinet Assembly ASDE-40							

REV.	ITEM NO.	*R.S.	SYMBOL DESIG.	STOCK/DWG NUMBER	DESCRIPTION	MFG CODE	MANUFACTURER PART NUMBER	QTY. ASSY.	QTY. UNIT	CODE	KARDEX	PURCHASE ORDER
					REFERENCE DRAWINGS							
F												
				31679	Layout			-	-			
				21252	Schematic 12 VDC Power Supply			-	-			
				42477	Blower Baffle Installation			-	-			
L				PS 10920	12 VDC P.S. Assembly			-	-			
L				[illegible]	Modification Drawing P.S.			-	-			
					Block Diagram - Functional			-	-			
								-	-			
				21479	Chassis Slide-Chassis Mtg.			-	-			
				21478	Chassis Slide-Chassis Mtg.			-	-			
				31289	Slide Installation - Chassis Meter Assy			-	-			

*R.S. - RECOMMENDED AS CUSTOMER SPARES

DEPARTMENT | ISSUED BY | ISSUE DATE

LING ELECTRONICS A division of LING-TEMCO-VOUGHT INC

ENGINEERING PARTS LIST

DATE 7-28-64 PAGE 3.1 MANUAL
REV. F CONT'D ON 4 REQUISITION NO.

MODEL OR ASSY.	SERIAL NO.	SHOP ORDER	PON	QTY.	ACCOUNT NO.	M-DAY	DATE
ASDE-40							

REV.	ITEM	*R.S.	SYMBOL DESIG.	STOCK/DWG NUMBER	DESCRIPTION	MFG CODE	MANUFACTURER PART NUMBER	QTY. ASSY.	QTY. UNIT	CODE	KARDEX	P.R.
				43618	Assembly & Wiring Relay Chassis			-	-			
				32634	Schematic Relay Chassis			-	-			
				43606	Silkscreen, Chassis			-	-			
F				5828	Filter Rack			-	-			
F				50035	Filter Rack			-	-			

*R.S. - RECOMMENDED AS CUSTOMER SPARES

DEPARTMENT | ISSUED BY | ISSUE DATE

ENGINEERING PARTS LIST

DATE [illegible] PAGE 4 MANUAL
CONT'D ON 5 REQUISITION NO.

MODEL OR ASSY.	SERIAL NO.	SHOP ORDER		QTY.	ACCOUNT NO.	M-DAY
ASDE-40						

		*R.S.	Symbol Desig.	STOCK/DWG NUMBER	DESCRIPTION	MFG. CODE	MANUFACTURER PART NUMBER	QTY. ASSY.	QTY. UNIT			
				33364	Cabinet Assembly (See Own EPL)			1	1			
				80153-0038	Fan Assembly 450 cfm	KT	KP 875	1	1			
				82600-0001	Slides - Flange Mounting w/Brackets 1-" Length	MOD		8 sets	8 sets			
				82600-0002	Slides - Flange Mounting w/Brackets 14" Length	MOD		3 sets	3 sets			
				21002	Spacer - Hinge Mounting Card Rack			1	1			
				21396	Bar Mounting - Filter Rack			4	4			
				22593	Bar - Cable Mounting			6	6			

*R.S. - RECOMMENDED AS CUSTOMER SPARES

DEPARTMENT | ISSUED BY | ISSUE DATE

LING ELECTRONICS A division of LING-TEMCO-VOUGHT INC

ENGINEERING PARTS LIST

MODEL OR ASSY.	SERIAL NO.	SHOP ORDER	PON	QTY.	ACCOUNT NO.	M-DAY
ASDE-40						

REV.	ITEM	*R.S.	SYMBOL DESIG.	STOCK/DWG NUMBER	DESCRIPTION	MFG. CODE	MANUFACTURER PART NUMBER	QTY. ASSY.	QTY. UNIT	CODE	KARDEX	PURCH ORDE
				80100-0139	Connector, Twist-Lok 10A 2 wire	AH&H	XT-7465	3	3			
				80100-0140	Receptacle, Twist-Lok 10A 2 wire	AH&H	XT-7468	3	3			
				PS-10920	Regulated Power Supply 1 amp 12VDC output			1	1			
				82410-0039	Receptacle 15 amp 125V	HU	7608	1	1			
				82119-0066	Step Thread, koroseal vinyl square nose length 36"	CACTUS	Type 4020	1	1			
				82005-0001	Adhesive	MMM	Type EC1099	AR	AR			
				31535	Bracket Mounting, Power Pac (PS-10920)			1	1			
				85262-1408	Spacer Nylon 3/8 x 1/2 x 8-32 Thd			42	43			

*R.S. - RECOMMENDED AS CUSTOMER SPARES

DEPARTMENT	ISSUED BY	ISSUE DATE

LING ELECTRONICS A division of LING-TEMCO-VOUGHT, INC

ENGINEERING PARTS LIST

DATE [illegible] PAGE [illegible] MANUAL
REV. A CONT'D ON 1 REQUISITION NO.

MODEL OR ASSY.	SERIAL NO.	SHOP ORDER	PGN	QTY.	ACCOUNT NO.	M-DAY	DATE
Cabinet Assembly ASDE-40							

REV.	ITEM NO.	*R.S.	SYMBOL DESIG.	STOCK/DWG NUMBER	DESCRIPTION	MFG CODE	MANUFACTURER PART NUMBER	QTY. ASSY.	QTY. UNIT	CODE	KARDEX	PURCHASE ORDER
				20888	Panel - Top			1	1			
				20892	Bracket - Support Filter Rack			4	4			
				31670	Frame Modification Slide Mounting			-	-			
A				32036	Filter Housing - HA Case			-	-			
				31141	Top Plate - Air Baffle			2	2			
				31142	Support - Baffle Mounting			1	1			
				31315	Plate - Receptacle Mounting			1	1			
				32031	Filter Housing - JA Case			-	-			
				32231	Support - Filter			2	2			

*R.S. - RECOMMENDED AS CUSTOMER SPARES

DEPARTMENT	ISSUED BY	ISSUE DATE

ENGINEERING PARTS LIST

PAGE 1 MANUAL
CONT'D ON 8 REQUISITION NO.

MODEL OR ASSY.	SERIAL NO.	SHOP ORDER	PON	QTY.	ACCOUNT NO.	MFAY
ASDE-40						

REV.	ITEM NO.	*R.S.	SYMBOL DESIG.	STOCK/DWG NUMBER	DESCRIPTION	MFG CODE	MANUFACTURER PART NUMBER	QTY. ASSY.	QTY. UNIT			
				42014	Hood - Blower			1	1			
				43061	Filter Rack - Welded Assembly 90 Insert - Stencil per 5912			1	1			
				20420	Nameplate - Patent			1	1			
				42578	Supplement Filter Rack			-	-			
—												
				80114-0036	Clamp - Cable	T&B	TC-102	32	32			
—												
				20927	Nameplate Location			-	-			
				21617	Nameplate			1	1			
1				81013-0026	Bracket - Threaded	CT	B162	6	6			
				21159	Channel Select Numbers (#1 thru #45 Only)			3 set	3 set			

*R.S. - RECOMMENDED AS CUSTOMER SPARES

LING ELECTRONICS A division of LING-TEMCO-VOUGHT INC

DEPARTMENT	ISSUED BY	ISSUE DATE

ENGINEERING PARTS LIST

DATE [illegible] PAGE 6 MANUAL
REV. — CONT'D ON 9 REGISTRATION NO.

MODEL OR ASSY.	SERIAL NO.	SHOP ORDER	PON	QTY.	ACCOUNT NO.	W/DAY
Cabinet Assembly ASDE-40						

REF.	ITEM NO.	*R.S.	SYMBOL DESIG.	STOCK/DWG NUMBER	DESCRIPTION	MFG CODE	MANUFACTURER PART NUMBER	QTY. ASSY.	QTY. UNIT	CODE	TARGET	
				21172	Bus Bar #1			2	2			
				21174	Bus Bar #3			1	1			
				21634	Bus Bar #7			5	5			
				21635	Bus Bar #8			5	5			
				21636	Bus Bar #9			5	5			

*R.S. - RECOMMENDED AS CUSTOMER SPARES

DEPARTMENT | ISSUED BY | ISSUE DATE

ENGINEERING PARTS LIST

PAGE 9

MODEL OR ASSY.	SERIAL NO.	SHOP ORDER	P.O.N.	QTY.	ACCOUNT NO.	MFRS.
Cabinet Assembly ASDE-40						

P.V.	ITEM	*R.S.	SYMBOL DESIG.	STOCK/DWG NUMBER	DESCRIPTION	MFG CODE	MANUFACTURER PART NUMBER	QTY. ASSY.	QTY. UNIT	C.D.	KARDEX
			R1 thru R90		Resistor 510 ohm 1/2W 5%	AB		90	90		
				21623-1	Filter - Low Frequency	DECO		2	2		
				21623-2	Filter - Low Frequency	DECO		2	2		
				21623-3	Filter - Low Frequency	DECO		2	2		
				21623-4	Filter - Low Frequency	DECO		2	2		
				21623-5	Filter - Low Frequency	DECO		2	2		
				20610-6	Filter - Nominal 50 Cycles	DECO		2	2		
				20610-7	Filter - Nominal 50 Cycles	DECO		2	2		
				20610-8	Filter - Nominal 50 Cycles	DECO		2	2		
				20610-9	Filter - Nominal 50 Cycles	DECO		2	2		
				20610-10	Filter - Nominal 50 Cycles	DECO		2	2		

*R.S. - RECOMMENDED AS CUSTOMER SPARES

DEPARTMENT	ISSUED BY	ISSUE DATE

LING ELECTRONICS

ENGINEERING PARTS LIST

REV. — CONT'D ON 11 REQUISITION NO.

MODEL OR ASSY.	SERIAL NO.	SHOP ORDER	PON	QTY.	ACCOUNT NO.	M-DAY
Cabinet Assembly ASDE-40						

REV.	ITEM NO.	*R. S.	SYMBOL DESIG.	STOCK/DWG NUMBER	DESCRIPTION	MFG CODE	MANUFACTURER PART NUMBER	QTY. ASSY.	QTY. UNIT	USE CODE	KARDEX	PURCHASE ORDER
				20610-11	Filter - Nominal 50 Cycles	DECO		2	2			
				20610-12	Filter - Nominal 50 Cycles	DECO		2	2			
				20610-13	Filter - Nominal 50 Cycles	DECO		2	2			
				20610-14	Filter - Nominal 50 Cycles	DECO		2	2			
				20610-15	Filter - Nominal 50 Cycles	DECO		2	2			
				20610-16	Filter - Nominal 50 Cycles	DECO		2	2			
				20610-17	Filter - Nominal 50 Cycles	DECO		2	2			
				20610-18	Filter - Nominal 50 Cycles	DECO		2	2			
				20610-19	Filter - Nominal 50 Cycles	DECO		2	2			
				20610-20	Filter - Nominal 50 Cycles	DECO		2	2			
				20610-21	Filter - Nominal 50 Cycles	DECO		2	2			
				20610-22	Filter - Nominal 50 Cycles	DECO		2	2			

LING ELECTRONICS

ENGINEERING PARTS LIST

DATE [illegible] PAGE 11 MANUAL ____
REV. — CONT'D ON 12 REQUISITION NO.

MODEL OR ASSY.	SERIAL NO.	SHOP ORDER	PON	QTY.	ACCOUNT NO.	M-DAY	DATE
Cabinet Assembly ASDE-40							

REV.	ITEM NO.	*R. S.	SYMBOL DESIG.	STOCK/DWG NUMBER	DESCRIPTION	MFG CODE	MANUFACTURER PART NUMBER	QTY. ASSY.	QTY. UNIT	CODE	KARDEX	PURCHASE ORDER
				20610-23	Filter - Nominal 50 Cycles	DECO		2	2			
				20610-24	Filter - Nominal 50 Cycles	DECO		2	2			
				20610-25	Filter - Nominal 50 Cycles	DECO		2	2			
				20610-26	Filter - Nominal 50 Cycles	DECO		2	2			
				20610-27	Filter - Nominal 50 Cycles	DECO		2	2			
				20610-28	Filter - Nominal 50 Cycles	DECO		2	2			
				20610-29	Filter - Nominal 50 Cycles	DECO		2	2			
				20610-30	Filter - Nominal 50 Cycles	DECO		2	2			
				20610-31	Filter - Nominal 50 Cycles	DECO		2	2			
				20610-32	Filter - Nominal 50 Cycles	DECO		2	2			
				20610-33	Filter - Nominal 50 Cycles	DECO		2	2			
				20610-34	Filter - Nominal 50 Cycles	DECO		2	2			

*R.S. - RECOMMENDED AS SUPPLEMENT SPARES

LING ELECTRONICS [illegible]

DEPARTMENT | [illegible] | [illegible]

ENGINEERING PARTS LIST

DATE 4-30-64 PAGE 12 MANUAL
REV. — CONTROL NO. 13 REQUISITION NO.

MODEL OR ASSY. Cabinet Assemblyy ASDE-40 | SERIAL NO. | SHOP ORDER | PON | QTY. | ACCOUNT NO. | M-DAY | DA

REV.	ITEM NO.	*R. S.	SYMBOL DESIG.	STOCK/DWG NUMBER	DESCRIPTION	MFR CODE	MANUFACTURER PART NUMBER	QTY/ ASSY.	QTY. UNIT	CODE	KARDEX	PURCHASE ORDER
				20610-35	Filter - Nominal 50 Cycles	DECO		2	2			
				20610-36	Filter - Nominal 50 Cycles	DECO		2	2			
				20610-37	Filter - Nominal 50 Cycles	DECO		2	2			
				20610-38	Filter - Nominal 50 Cycles	DECO		2	2			
				20610-39	Filter - Nominal 50 Cycles	DECO		2	2			
				20610-40	Filter - Nominal 50 Cycles	DECO		2	2			
				20610-41	Filter - Nominal 50 Cycles	DECO		2	2			
				20610-42	Filter - Nominal 50 Cycles	DECO		2	2			
				20610-43	Filter - Nominal 50 Cycles	DECO		2	2			
				20610-44	Filter - Nominal 50 Cycles	DECO		2	2			
				20610-45	Filter - Nominal 50 Cycles	DECO		2	2			

*R.S. RECOMMENDED AS CUSTOMER SPARE | DEPARTMENT | ISSUED BY | ISSUE DATE

LING ELECTRONICS division of LING-TEMCO-VOUGHT, INC.

ENGINEERING PARTS LIST

DATE [illegible] PAGE 13 MANUAL

REV. N CONT'D ON 13.1 REQUISITION NO.

MODEL OR ASSY.	SERIAL NO.	SHOP ORDER	PON	QTY.	ACCOUNT NO.	M-DAY
ASDE-40						

REV.	ITEM NO.	*R.S.	SYMBOL DESIG.	STOCK/DWG NUMBER	DESCRIPTION	MFG CODE	MANUFACTURER PART NUMBER	QTY. ASSY.	QTY. UNIT	CODE	KARDEX	PURCH ORDE
			107	21107	Cable #107			(1)	(1)			
			107-1 107-2	82341-0006	Audio Cable - 2 Conductor Black	BEL	8450	10'	60½'			
L			107-3	82326-2000	#20 AWG Single Conductor Black			2'	43'			
L			107-4	82326-2002	#20 AWG Single Conductor Red			5⅓'	35'			
E		1		80100-0128	Connector	AMP	126-196	1	3			
		1		80100-0119	Connector	AMP	126-217	1	4			
			111	21108	Cable #111			(1)	(1)			
			111-1 111-2	82341-0006	Audio Cable - 2 Conductor Black	BEL	8450	9'	-			
				80100-0120	Connector	AMP	17-10090-1	1	2			
				80100-0119	Connector,	AMP	126-217	1	-			
				80101-0001	Clamp, for 17-10090-1	AMP	17-310-01	1	2			

*R.S. - RECOMMENDED AS CUSTOMER SPARES

DEPARTMENT | ISSUED BY | ISSUE DATE

ENGINEERING PARTS LIST

DA 2-365 PAGE 3 MANUAL
REV. L CONT'D ON 17 REQUISITION NO.

MODEL OR ASSY.	SERIAL NO.	SHOP ORDER	PON	QTY.	ACCOUNT NO.	M-DAY	DATE
ASDE-40							

ITEM NO.	*R. S.	SYMBOL DESIG.	STOCK/DWG NUMBER	DESCRIPTION	MFG CODE	MANUFACTURER PART NUMBER	QTY. ASSY.	QTY. UNIT	CODE	KARDEX	PURCHASE ORDER
		111-3	82341-0014	#20 AWG Shielded Wire-2 Cond. Type C/N per MIL-W-16878 Orange Jacket			5'	9'			
		111-4	82326- 2002	#20 AWG Single Conductor Red			7'	-			
		112	21109	Cable #112			(1)	(1)			
		112-1	82331-0002	#26 AWG Twisted Pair Strip 20 Conductor Strip			6½'	11'			

*R.S. - RECOMMENDED AS CUSTOMER SPARES

DEPARTMENT | ISSUED BY | ISSUE DATE | REC

LING ELECTRONICS A division of LING-TEMCO-VOUGHT, INC

ENGINEERING PARTS LIST

DATE _____ PAGE _____ MANUAL _____
REV. _____ CONT'D ON _____ REQUISITION NO. _____

MODEL OR ASSY.	SERIAL NO.	SHOP ORDER	PON	QTY.	ACCOUNT NO.	M-DAY	DATE
ASDE-40							

REV.	ITEM NO.	*R.S.	SYMBOL DESIG.	STOCK/DWG NUMBER	DESCRIPTION	MFG CODE	MANUFACTURER PART NUMBER	QTY. ASSY.	QTY. UNIT	CODE	KARDEX	PURCHASE ORDER
			112-2	82331-0003	#26 AWG twisted pair strip 20 conductor strip			6½'	11'			
			112-3	82331-0004	#26 AWG twisted pair strip 20 conductor strip			6½'	11'			
			112-4	82331-0005	#26 AWG twisted pair strip 20 conductor strip			6½'	11'			
				80099-0059	Connector	AMP	220-2N104	1	2			
				80099-0057	Contact, male	AMP	220-P02	80	160			
				80099-0058	Connector	AMP	220-1N104	1	2			
				80099-0056	Contact, female	AMP	220-S02	80	160			
				80114-0034	Clamp	AMP	220-6	2	4			
			114	21111	Cable #114			(1)	(1)			
				82331-0001	#26 AWG twisted pair strip 12 conductor strip			3'	3'			

*R.S. - RECOMMENDED AS CUSTOMER SPARES

DEPARTMENT	ISSUED BY	ISSUE DATE

LING ELECTRONICS A division of LING-TEMCO-VOUGHT INC

ENGINEERING PARTS LIST

DATE _____ PAGE _____ MANUAL _____

REV. N CONT'D ON 15 REQUISITION NO. _____

MODEL OR ASSY.	SERIAL NO.	SHOP ORDER	PON	QTY.	ACCOUNT NO.	M-DAY	DATE
ASDE-40							

ITEM	INDEX	*R.S.	SYMBOL DESIG.	STOCK/DWG NUMBER	DESCRIPTION	MFR. CODE	MANUFACTURER PART NUMBER	QTY. ASSY.	QTY. UNIT	CODE	KARDEX	PURCHAS ORDER
				80100-0111	Connector	AMP	17-20150-1	1	1			
				80100-0105	Connector	AMP	17-20250-1	1	1			
			117	21113	Cable #117			(1)	(1)			
			117-1	82331-0002	#26 AWG Twisted Pair Strip 20 Conductor Strip			4½'	-			
				80101-0002	Clamp, for 17-20150-1	AMP	17-311-01	1	1			
				80101-0003	Clamp, for 17-20250-1	AMP	17-312-01	1	1			

*R.S. - RECOMMENDED AS CUSTOMER SPARES

DEPARTMENT | ISSUED BY | ISSUE DATE | RE

ENGINEERING PARTS LIST

DATE _____ PAGE _____ MANUAL _____

REV. _____ CONT'D ON _____ REQUISITION NO. _____

MODEL OR ASSY.	SERIAL NO.	SHOP ORDER	PON	QTY.	ACCOUNT NO.	M-DAY	DATE
ASDE-40							

REV.	ITEM	*R.S.	SYMBOL DESIG.	STOCK/DWG NUMBER	DESCRIPTION	MFG CODE	MANUFACTURER PART NUMBER	QTY. ASSY.	QTY. UNIT	CODE	KARDEX	PURCHASE ORDER
			117-2	82331-0003	#26 AWG twisted pair strip 20 conductor strip			4½'	-			
			117-3	82331-0004	#26 AWG twisted pair strip 20 conductor strip			4½'	-			
			117-5	82331-0005	#26 AWG twisted pair strip 20 conductor strip			4½'	-			
				80099-0059	Connector	AMP	220-2N104	1	-			
				80099-0057	Contact, male	AMP	220-P02	80	-			
				80099-0058	Connector	AMP	220-1N104	1	-			
				80099-0056	Contact, female	AMP	220-S02	80	-			
				80114-0034	Connector Clamp	AMP	220-6	2	-			
			120	21115	Cable #120			(1)	(1)			
				82331-0006	Shielded Flat Cable 5 conductor			4½'	4½'			

*R.S. - RECOMMENDED AS CUSTOMER SPARES

DEPARTMENT | ISSUED BY | ISSUE DATE

LING ELECTRONICS A division of LING-TEMCO-VOUGHT, INC

ENGINEERING PARTS LIST

DATE [illegible] PAGE [illegible] MANUAL ____
REV. — CONT'D ON [illegible] REQUISITION NO.

MODEL OR ASSY.	SERIAL NO.	SHOP ORDER	FON	QTY.	ACCOUNT NO.	M-DAY	DATE
ASDE-40							

REV.	ITEM NO.	*R.S.	SYMBOL DESIG.	STOCK/DWG NUMBER	DESCRIPTION	MFG CODE	MANUFACTURER PART NUMBER	QTY. ASSY.	QTY. UNIT	CODE	KARDEX	PURCHASE ORDER
				80100-0123	Connector	AMP	57-30140	1	2			
			123	21445	Cable #123			(1)	(1)			
			123-1 123-2	82341-0006	Audio Cable - 2 Conductor Black	BEL	8450	11½'	-			
			123-3	82326-2000	#20 AWG - Single Conductor, Black			2½'	-			

*R.S. - RECOMMENDED AS CUSTOMER SPARES

DEPARTMENT	ISSUED BY	ISSUE DATE

LING ELECTRONICS A division of LING-TEMCO-VOUGHT INC

ENGINEERING PARTS LIST

DATE [illegible] PAGE [illegible] MANUAL
REV. — CONT'D ON [illegible] REQUISITION NO.

MODEL OR ASSY.	SERIAL NO.	SHOP ORDER	PON	QTY.	ACCOUNT NO.	M-DAY	DATE
ASDE-40							

REV.	ITEM NO.	*R.S.	SYMBOL DESIG.	STOCK/DWG NUMBER	DESCRIPTION	MFG CODE	MANUFACTURER PART NUMBER	QTY. ASSY.	QTY. UNIT	CODE	KARDEX	PURCHASE ORDER
				80100-0124	Connector	AMP	126-222	1	1			
				80100-0118	Connector	AMP	126-223	2	4			
			124	21142	Cable #123			(1)	(1)			
				82331-0007	Shielded Flat Cable 10 Conductor Strip			24'	24'			
				80100-0125	Connector	AMP	26-4301-24S	1	1			
				80100-0126	Connector	AMP	26-4302-24S	1	1			
			128	21118	Cable #128			(1)	(1)			
					#20 AWG - Single Conductor Black			3½'	-			
					#20 AWG - Single Conductor Red			3½'	-			
			128-2	82326-2009	#20 AWG - Single Conductor White			3'	6'			

*R.S. - RECOMMENDED AS CUSTOMER SPARES

DEPARTMENT | ISSUED BY | ISSUE DATE

LING ELECTRONICS A division of LING-TEMCO-VOUGHT, INC

ENGINEERING PARTS LIST

DATE 1-3-65 PAGE 1 MANUAL
REV. L CONT'D ON 1 REQUISITION NO.

MODEL OR ASSY.	SERIAL NO.	SHOP ORDER	PON	QTY.	ACCOUNT NO.	M-DAY	DATE
ASDE-40							

REV.	ITEM NO.	*R.S.	SYMBOL DESIG.	STOCK/DWG NUMBER	DESCRIPTION	MFG CODE	MANUFACTURER PART NUMBER	QTY. ASSY.	QTY. UNIT	CODE	KARDEX	PURCHASED
L			128-3	82326-2000	#20 AWG - Single Conductor Black			4'	-			
L					#20 AWG - Single Conductor Black			3½'	-			
L					#20 AWG - Single Conductor Red			3½'				
					Connector	AMP	126-196	1	-			
			130	21120	Cable #130			(1)	(1)			

*R.S. - RECOMMENDED AS CUSTOMER SPARES

DEPARTMENT | ISSUED BY | ISSUE DATE

LING ELECTRONICS A Div. of LING-TEMCO-VOUGHT INC

ENGINEERING PARTS LIST

DATE 7-2-65 PAGE 15 MANUAL
REV. N CONT'D ON 1-1 REQUISITION NO.

MODEL OR ASSY.	SERIAL NO.	SHOP ORDER	PON	QTY.	ACCOUNT NO.	M-DAY	CAT
ASDE-40							

REF.	ILLUS.	*R.S.	SYMBOL DESIG.	STOCK/DWG NUMBER	DESCRIPTION	MFG CODE	MANUFACTURER'S PART NUMBER	QTY. ASSY.	QTY. UNIT	CODE	KARDEX	PURCH. REQ.
F			130-1 130-2	82341-0006	Audio Cable - 2 Conductor	BEL	8450	14½'	-			
F			130-3	82326-1800	#20 AWG Single Conductor Black			7½'	-			
				80100-0120	Connector	AMP	17-10090-1	1	-			
				80100-0127	Connector	AMP	126-195	1	4			
				80101-0001	Clamp, for 17-10090-1	AMP	17-310-01	1	-			
			131	21121	Cable #131			(1)	(1)			
			131-1		#22 AWG Shielded Wire-2 Cond. Type C/U Per MIL-W-16878 Orange Jacket			7'	-			
F			131-2 131-3	82326-2001	#20 AWG - Single Conductor Brown			16'	16'			
F				82326-2008	#20 AWG - Single Conductor Grey			16'	16'			

*R.S. - RECOMMENDED AS CUSTOMER SPARES

DEPARTMENT | ISSUED BY | ISSUE DATE

LING ELECTRONICS A division of LING-TEMCO-VOUGHT, INC.

ENGINEERING PARTS LIST

DATE 7-3-68 PAGE 17 MANUAL
REV. L CONT'D ON 18 REQUISITION NO.

MODEL OR ASSY.	SERIAL NO.	SHOP ORDER	PON	QTY.	ACCOUNT NO.	M-DAY	DATE
ASDE-40							

REV.	ITEM	*R.S.	SYMBOL DESIG.	STOCK/DWG NUMBER	DESCRIPTION	MFG CODE	MANUFACTURER PART NUMBER	QTY. ASSY.	QTY. UNIT	CODE	KARDEX	PURCHASE ORDER
L			131-4	82326-2000	#20 AWG - Single Conductor Black			3'	-			
			131-5	82331-0013	#22 AWG Single Conductor Strip 4 Conductor Strip			6½'	6½'			
				80100-0123	Connector	AMP	57-30140	1	-			
				80100-0127	Connector	AMP	126-195	1	-			
E				80100-0118	Connector	AMP	126-223	1	-			
			137	21124	Cable #137			(1)	(1)			
				82341-0006	Audio Cable - 2 Conductor	BEL	8450	5½'	-			
				80100-0119	Connector	AMP	126-217	1	-			

*R.S. - RECOMMENDED AS CUSTOMER SPARES

DEPARTMENT | ISSUED BY | ISSUE DATE

LING ELECTRONICS A division of LING-TEMCO-VOUGHT INC

ENGINEERING PARTS LIST

DAT 7-3-62 PAGE 18 MANUAL
REV. L CONT'D ON 19 REQUISITION NO.

MODEL OR ASSY.	SERIAL NO.	SHOP ORDER	PON	QTY.	ACCOUNT NO.	M-DAY	DAT
ASDE-40							

REV.	ITN EC. M	*R. S.	SYMBOL DESIG.	STOCK/DWG NUMBER	DESCRIPTION	MFG CODE	MANUFACTURER PART NUMBER	QTY. ASSY.	QTY. UNIT	CODE	KARDEX	PURCH ORD
	-			80100-0118	Connector	AMP	126-223	1	-			
			145	21125	Cable #145			(1)	(1)			
			145-1		#22 AWG Shielded Wire Type C/U per MIL-W-16878			6½'	-			
L			145-2	82326-1800	#20 AWG - Single Conductor Black .			3'	-			
				80100-0118	Connector	AMP	126-223	1	-			
				80100-0127	Connector	AMP	126-195	1	-			
			147	21127	Cable #147			(1)	(1)			
				82341-0006	Audio Cable	BEL	8450	5'	-			
				80100-0119	Connector	AMP	126-217	1	-			
F			185	22073	Cable #185			(1)	(1)			
					#20 AWG Shielded Wire, 2 Cond. Type C/N per MIL-W-16878 Orange Plastic			4'	-			
			150	21130	Cable #150			(1)	(1)			

*R.S. - RECOMMENDED AS CUSTOMER SPARES

DEPARTMENT | ISSUED BY | ISSUE DATE

ENGINEERING PARTS LIST

DATE 7-3-02 PAGE 15 MANUAL
REV. L CONT'D ON 30 REQUISITION NO.

MODEL OR ASSY.	SERIAL NO.	SHOP ORDER	PON	QTY.	ACCOUNT NO.	M-DAY	DATE
ASDE-40							

REV.	ITEM	INC.	*R.S.	SYMBOL DESIG.	STOCK/DWG NUMBER	DESCRIPTION	MFG CODE	MANUFACTURER PART NUMBER	QTY. ASSY.	QTY. UNIT	CODE	KARDEX	PURCHASE ORDER
				150-1	82341-0006	Audio Cable - 2 Conductor Black	BEL	8450	5'	-			
L						#20 AWG - Single Conductor Black			6'	-			
L						#20 AWG - Single Conductor Red			6'	-			
					80100-0128	Connector	AMP	126-196	1	1			
					80100-0127	Connector	AMP	126-195	1	-			
				154	21263	Cable #154			(1)	(1)			
L						#20 AWG - Single Conductor Black			1½'	-			
L						#20 AWG - Single Conductor Red			1½'	-			
				159	21322	Cable #159			(1)	(1)			
L						#20 AWG - Single Conductor Black			4½'	-			
L						#20 AWG - Single Conductor Red			4½'	-			
L				159-2	82326-1809	#20 AWG - Single Conductor White			3'	-			

*R.S. - RECOMMENDED AS CUSTOMER SPARES

DEPARTMENT | ISSUED BY | ISSUE DATE

ENGINEERING PARTS LIST

DATE _____ PAGE 2 MANUAL _____

REV. _____ CONT'D ON 3 REQUISITION NO. _____

MODEL OR ASSY.	SERIAL NO.	SHOP ORDER	PON	QTY.	ACCOUNT NO.	M-DAY	DAT
ASDE-40							

REV.	I.N.U.M.	*R.S.	SYMBOL DESIG.	STOCK/DWG NUMBER	DESCRIPTION	MFG CODE	MANUFACTURER PART NUMBER	QTY. ASSY.	QTY. UNIT	CODE	KARDEX	FROM
					Access Panel Assembly Consisting of:							
L				44637	Access Panel Assembly			(1)	(1)			
L				44638	Access Panel Complete			1	1			
L				44639	Access Panel Wiring			-	-			
L				44640	Access Panel			-	-			
L												
L			J5	80100-0132	Receptacle	CAN	XLR-3-32	1	1			
			J9	80100-0133	Receptacle	CAN	XLR-5-32	1	1			
			J10	80100-0130	Receptacle	CAN	XLR-3-31	1	1			
			J11	80100-0137	Receptacle	CAN	RGK-12-31-SL	1	1			
			J12	80100-0134	Receptacle	CAN	MS-3102E-32-2010-47-S	1	1			

*R.S. - RECOMMENDED AS CUSTOMER SPARES

DEPARTMENT | ISSUED BY | ISSUE DATE

LING ELECTRONICS A division of LING-TEMCO-VOUGHT INC

ENGINEERING PARTS LIST

DATE 2-31-66 PAGE 21 MANUAL
REV. F CONT'D ON 22 REQUISITION NO.

MODEL OR ASSY.	SERIAL NO.	SHOP ORDER	PON	QTY.	ACCOUNT NO.	M-DAY
Access Panel ASDE-40						

REV.	ITEM NO.	*R.S.	SYMBOL DESIG.	STOCK/DWG NUMBER	DESCRIPTION	MFG CODE	MANUFACTURER PART NUMBER	QTY. ASSY.	QTY. UNIT	CODE	KARDEX	PURCH. DES.
L			J13, J15	80100-0131	Receptacle	CAN	XLR-5-31	2	3			
			J14	82410-0016	Receptacle, Turn & Pull or	AH&B HU	XT7556	1	1			
F												
				21666	Buss Bar - Long			1	1			
				21667	Buss Bar - Short			1	1			
				21668	Ground Stud Assembly			-	-			
				21621	Grommet			2	2			
				82470-0001	Lug	API	321878	1	1			
L				85291-2850	Lug 90°	API	322922	1	1			
				82470-0003	Lug	API	36919	1	1			
/				85262-1408	Spacer - Nylon 3/8 Dia-½LG-8-32 Tap Thru	TFE HOLDING		1	2			

*R.S. - RECOMMENDED AS CUSTOMER SPARES

DEPARTMENT | ISSUED BY | ISSUE DATE

ENGINEERING PARTS LIST

DA [illegible] PAGE 22 MANUAL

RE [illegible] CONT'D ON 23 REQUISITION NO.

MODEL OR ASSY.	SERIAL NO.	SHOP ORDER	PON	QTY.	ACCOUNT NO.	M-DAY	DATE
ASDE-40 Access Panel							

REV.	ITEM	*R.S.	SYMBOL DESIG.	STOCK/DWG NUMBER	DESCRIPTION	MFG CODE	MANUFACTURER PART NUMBER	QTY. ASSY.	QTY. UNIT	CODE	KARDEX	PURCHASE ORDER
			106	21007	Cable #106			(1)	(1)			
			106-1 106-2	82341-0006	Audio Cable - 2 Conductor Black	BEL	8450	5½'	10½'			
				80100-0118	Connector	AMP	126-223	1	1			
			136	21123	Cable #136			(1)	(1)			
				82331-0012	#26 AWG Twisted Pair	SS	ST-426-7BX	5½'	5½'			
				80114-0035	Connector Clamp	AMP	220-5	1	1			
A/A				80099-0101	Connector	AMP	220-2N052	1	1			
				80099-0057	Contacts - Male	AMP	220-P02	52	52			
			138	21008	Cable #138			(1)	(1)			
			138-1	82341-0013	#22 AWG Shielded Wire-2 Cond. Type C/U per MIL-W-16878 Orange Jacket			7½'	7½'			

*R.S. - RECOMMENDED AS CUSTOMER SPARES

DEPARTMENT ISSUED BY ISSUE DATE

LING ELECTRONICS

ENGINEERING PARTS LIST

DATE _____ PAGE _____ MAN. AC _____

REV. _____ CONT'D ON _____ REQUISITION NO. _____

MODEL OR ASSY.	SERIAL NO.	SHOP ORDER	PON	QTY.	ACCOUNT NO.	M-DAY	DAT
ASDE-40							

REV.	ITEM NO.	*R.S.	SYMBOL DESIG.	STOCK/DWG NUMBER	DESCRIPTION	MFG CODE	MANUFACTURER PART NUMBER	QTY. ASSY.	QTY. UNIT	CODE	KARDEX	PURCHA ORDER
L			138-2	82326-2000	#20 AWG, single conductor black			3'	3'			
				80100-0119	Connector	AMP	126-217	1	1			
			140	21009	Cable #140			(1)	(1)			
C			140-1	82333-1000	#10 AWG, black Type THW			10 1/3'	11 1/3			
B			140-2	82333-1009	#10 AWG, white Type THW			10 1/3'	10 1/3			
A			140-3		#10 AWG, black Type THW			1'	-			
				82470-0004	Lug	API	32589	6	6			

*R.S. - RECOMMENDED AS CUSTOMER SPARES

DEPARTMENT	ISSUED BY	ISSUE DATE

LING ELECTRONICS A division of LING-TEMCO-VOUGHT INC

ENGINEERING PARTS LIST

DATE _____ PAGE 2 MANUAL _____

REV. 1 CONT'D ON 25 REQUISITION NO. _____

MODEL OR ASSY.	SERIAL NO.	SHOP ORDER	PON	QTY.	ACCOUNT NO.	M-DAY	DATE
ASDE-40							

REV.	ITEM	*R.S.	SYMBOL DESIG.	STOCK/DWG NUMBER	DESCRIPTION	MFG CODE	MANUFACTURER PART NUMBER	QTY. ASSY.	QTY. UNIT	CODE	KARDEX	PURCH. ORDER
				23122	Connector, Plug, Assembly			(1)	(1)			
				80100-0267	Connector, Plug Male	CAN	CA3106E32-2010-47P	1	1			
				82230-0203J	Resistor, Comparator 20K ½W 5%			1	1			
				82326-1800	Wire #18 Awg. Blk.			2"	-			
				23123	Connector, Plug, Assembly			(1)	(1)			
				80100-0188	Connector, Plug, Male	CAN	RGK-12-22C-½	1	1			
				82326-1800	Wire #18 Awg. Blk.			2"	-			

*R.S. - RECOMMENDED AS CUSTOMER SPARES

DEPARTMENT | ISSUED BY | ISSUE DATE

ENGINEERING PARTS LIST

MODEL OR ASSY.	SERIAL NO.	SHOP ORDER	PON	QTY.	ACCOUNT NO.	M-DAY	DATE
ASDE-40 Access Panel							

REV.	ITEM	*R.S.	SYMBOL DESIG.	STOCK/DWG NUMBER	DESCRIPTION	MFG CODE	MANUFACTURER PART NUMBER	QTY. ASSY.	QTY. UNIT	CODE	KARDEX	PURCHASE ORDER
			165	21670	Cable #165			(1)	(1)			
			165-1 165-2	82341-0006	Audio Cable - 2 Conductor Black	BEL	8450	5'	-			
L			165-3	82333-1400	Wire #14AWG-Black-Type THW			6"	6"			
				80100-0127	Connector	AMP	126-195	1	1			
△ H				22812	Cable #189			(1)	(1)			
L				82339-0007	Coaxial Cable		RG 174/U	8'	8'			
L				80100-0259	Connector BNC	AMP	2-330058-1	1	1			
△ H												
L				82341-0015	Cable - 3 Cond. Shld.	BEL	8403	8'	8'			
L				80100-0266	Connector Receptacle	CAN	XLR-5-12C	1	1			

*R.S. - RECOMMENDED AS CUSTOMER SPARES

DEPARTMENT | ISSUED BY | ISSUE DATE

LING ELECTRONICS a unit of LING-TEMCO-VOUGHT INC

ENGINEERING PARTS LIST

DATE 11-21-66 PAGE 251 MANUAL
REV. A CONT'D ON REQUISITION NO.

MODEL OR ASSY.	SERIAL NO.	SHOP ORDER	PON	QTY.	ACCOUNT NO.	M.DAY	DATE
Access Panel ASDE-40							

REV.	ITEM NO.	*R.S.	SYMBOL DESIG.	STOCK/DWG NUMBER	DESCRIPTION	MFG CODE	MANUFACTURER PART NUMBER	QTY. ASSY.	QTY. UNIT	CODE	KARDEX	PLANNING
				22590	Cable #187			(1)	(1)			
				82341-0006	Cable - 2 Cond. Shielded	BEL	8450	32'	32'			
				80100-0304	Connector - Plug	AMP	126-220	1	1			
				22813	Cable #190			(1)	(1)			
				82341-0006	Cable - 2 Cond. Shielded	BEL	8450	21'	21'			
				80100-0054	Connector - Plug	CAN	RWK-6-22C-5/16	5	5			
				80100-0119	Connector - Plug	AMP	126-217	1	1			
				22591	Cable #188			(1)	(1)			
				82341-0006	Cable - 2 Cond. Shielded	BEL	8450	7'	7'			

*R.S. - RECOMMENDED AS CUSTOMER SPARES

DEPARTMENT | ISSUED BY | ISSUE DATE

LING ELECTRONICS A division of LING-TEMCO-VOUGHT, INC

ENGINEERING PARTS LIST

DATE [illegible] PAGE 2 MANUAL
REV. [illegible] CONT'D ON C6 REQUISITION NO.

MODEL OR ASSY.	SERIAL NO.	SHOP ORDER	PON	QTY.	ACCOUNT NO.	M-DAY	DATE
Access Panel ASDE-40							

REV.	ITEM NO.	*R.S.	SYMBOL DESIG.	STOCK/DWG NUMBER	DESCRIPTION	MFG CODE	MANUFACTURER PART NUMBER	QTY. ASSY.	QTY. UNIT	CODE	KARDEX	PURCHASE ORDER
				22588	Cable #186			(1)	(1)			
				82339-0007	Wire Coaxial		RG 174/U	5'	5'			
				82341-0006	Cable - 2 Cond. Shielded	BEL	8450	5'	5'			

*R.S. - RECOMMENDED AS CUSTOMER SPARES

DEPARTMENT | ISSUED BY | ISSUE DATE

LING ELECTRONICS A division of LING-TEMCO-VOUGHT INC

ENGINEERING PARTS LIST

DAT 5-20-64 PAGE 2 MANUAL
REV. N CONT'D ON 2 REQUISITION NO.

MODEL OR ASSY.	SERIAL NO.	SHOP ORDER	PON	QTY.	ACCOUNT NO.	M-DAY	DATE
ASDE-40 ACR-10A							

REV.	ITEM	*R.S.	SYMBOL DESIG.	STOCK/DWG NUMBER	DESCRIPTION	MFG CODE	MANUFACTURER - PART NUMBER	QTY. ASSY.	QTY. UNIT	CODE	KARDEX	PURCHASE ORDER
K				50021-1	Rack - P.C. Card Mounting with Card Guides			1	1			
				31546	Partition; Card Rack Modification			-	-			
F				50027	LDR and Mag. Amplifier Cable Installation			-	-			
F				50028	Mag. and Meter Amplifier Cable Installation			-	-			
F				50029	LDR and Meter Amplifier Cable Installation			-	-			
F				50030	Mag. Meter and LDR Cable Installation			-	-			
S				[illegible]	[illegible]							
K				31574	Brkt. Mtg. Card Rack			-	-			

*R.S. - RECOMMENDED AS CUSTOMER SPARES

DEPARTMENT | ISSUED BY | ISSUE DATE

LING ELECTRONICS Allied LING-TEMCO-VOUGHT INC

ENGINEERING PARTS LIST

DATE 9-10-59 PAGE 27 MANUAL
REV. F CONT'D ON 28 REQUISITION NO.

MODEL OR ASSY.	SERIAL NO.	SHOP ORDER	PON	QTY.	ACCOUNT NO.	M-DAY	DATE
ASDE-40 ACR-10A							

REV.	ITEM	*R.S.	SYMBOL DESIG.	STOCK/DWG NUMBER	DESCRIPTION	MFG CODE	MANUFACTURER PART NUMBER	QTY. ASSY.	QTY. UNIT	CODE	KARDEX	PURCHA ORDER
F												
F												
F												
F												

*R.S. - RECOMMENDED AS CUSTOMER SPARES

DEPARTMENT | ISSUED BY | ISSUE DATE

LING ELECTRONICS A division of LING-TEMCO-VOUGHT, INC

ENGINEERING PARTS LIST

DATE 7-31-64 PAGE 28 MANUAL
REV F CONT'D ON 2nd REQUISITION NO.

MODEL OR ASSY.	SERIAL NO.	SHOP ORDER	PON	QTY.	ACCOUNT NO.	M-DAY	DATE
ASDE-40 ACR-10A							

REV.	ITEM	*R. S.	SYMBOL DESIG.	STOCK/DWG NUMBER	DESCRIPTION	MFG CODE	MANUFACTURER PART NUMBER	QTY. ASSY.	QTY. UNIT	CODE	KARDEX	PURCHASE ORDER
F				82113-0004	Diode, Zener	IRC	1N1607	1	1			
F				82244-0101J	Resistor 100 ohm 25W	0		1	1			
F				82230-0391J	Resistor, Composition 390 ohm 1/2W 5%			1	1			
F				80101-0018	Connector	AMP	143-022-02-1016	15	15			
				80101-0019	Connector	AMP	143-012-02-1005	45	45			
				80101-0020	Connector	AMP	143-010-02	46	46			
F												
F				85221-1200	Lug - Red	AMP	31885	4	4			
F				82165-0002	Grommet, Nylon	NYLON MOLDING CO.	651-H-B	8	8			
				82136-0013	Latch Panel	SOUTHCO	45-14-101-10	12	12			
				82136-0014	Spacer Latch	SOUTHCO	45-14-101-15	36	36			

*R.S. - RECOMMENDED AS CUSTOMER SPARES

DEPARTMENT ISSUED BY ISSUE DATE

ENGINEERING PARTS LIST

DATE [illegible] PAGE 20 MANUAL
REV. [illegible] CONT'D ON [illegible] REQUISITION NO.

MODEL OR ASSY.	SERIAL NO.	SHOP ORDER	PON	QTY.	ACCOUNT NO.	M-DAY	DAT
ASDE-40 (ACR-10A)							

REV.	ITEM NO.	*R.S.	SYMBOL DESIG.	STOCK/DWG NUMBER	DESCRIPTION	MFG CODE	MANUFACTURER PART NUMBER	QTY. ASSY.	QTY. UNIT	CODE	KARDEX	PURCH ORD
			170	22052	Cable #170			(1)	(1)			
-				82326-2001	#20 AWG - Single Conductor Brown			7'	7'			
-				82326-2008	#20 AWG - Single Conductor Gray			7'	7'			
			183	22063	Cable #183			(1)	(1)			
			183-1	82331-0001	#26 AWG Twisted Pair Strip 12 Conductor Strip			8½'	8½'			
			183-2	82339-0007	RG-174/U Co-ax Cable			8½'	55½'			
N				80100-0106	Connector	AMP	17-10150-1	1	2			
			168	22050	Cable #168			(1)	(1)			
			168-1,2 168-3,4	82331-0007	Flat Shielded Cable 10 Conductor Strip			20'	-			
			168-5	82331-0006	Flat Shielded Cable 5 Conductor Strip			5'	12½'			
			182	22062	Cable #182			(1)	(1)			
			182-1	82331-0002	#26 AWG Twisted Pair Strip 20 Conductor Strip			10½	26½			

[illegible] OMMENDED AS CUSTOMER SPARES

LING ELECTRONICS A division of LING-TEMCO-VOUGHT, INC

DEPARTMENT | ISSUED BY | ISSUE DATE

ENGINEERING PARTS LIST

DATE [illegible] PAGE [illegible] MANUAL
REV. [illegible] CONT'D ON [illegible] REQUISITION NO.

MODEL OR ASSY.	SERIAL NO.	SHOP ORDER	PON	QTY.	ACCOUNT NO.	M-DAY
ASDE-40 (ACR-10A)						

REV.	ITEM NO.	*R.S.	SYMBOL DESIG.	STOCK/DWG NUMBER	DESCRIPTION	MFG CODE	MANUFACTURER PART NUMBER	QTY. ASSY.	QTY. UNIT	CODE	KARDEX	[illegible]
			182-2	82331-0003	#26 AWG Twisted Pair Strip 20 Conductor Strip			10½'	26½'			
			182-3	82331-0004	#26 AWG Twisted Pair Strip 20 Conductor Strip			10½'	26½'			
			182-4	82331-0005	#26 AWG Twisted Pair Strip 20 Conductor Strip			10½'	26½'			
[illegible]				80099-0059	Connector	AMP	220-2N104	1	2			
[illegible]				80099-0057	Contacts - Male	AMP	220-P02	80	160			
[illegible]				80101-0002	Clamp (for 17-10150-1 & 17-20150-1)	AMP	17-311-01	1	3			
			175	22057	Cable #175			(1)	(1)			
			175-1	82331-0001	#26 AWG Twisted Pair Strip 12 Conductor Strip			7'	11½'			
			175-2	82326-1800	#18 AWG Single Conductor Black			3'	3'			
				80100-0111	Connector	AMP	17-20150-1	1	1			
			169	22051	Cable #169			(1)	(1)			
			169-1,2 169-3,4	82331-0007	Flat Shielded Cable 10 Conductor Strip			27'	-			

*R.S. - RECOMMENDED AS CUSTOMER SPARES

DEPARTMENT | ISSUED BY | ISSUE DATE

LING ELECTRONICS A division of LING-TEMCO-VOUGHT, INC

ENGINEERING PARTS LIST

DATE [illegible] PAGE 31 MANUAL
REV. [illegible] CONT'D ON 31.A REQUISITION NO.

MODEL OR ASSY.	SERIAL NO.	SHOP ORDER	PON	QTY.	ACCOUNT NO.	M-DAY	DA
ASDE-40 (ACR-10A)							

REV.	ITEM NO.	*R.S.	SYMBOL DESIG.	STOCK/DWG NUMBER	DESCRIPTION	MFG CODE	MANUFACTURER PART NUMBER	QTY. ASSY.	QTY. UNIT	CODE	KARDEX	PURCH. ORDER
			169-5	82331-0006	Flat Shielded Cable 5 Conductor Strip			7½'	-			
			176	22058	Cable #176			(1)	(1)			
			176-1	82331-0002	#26 AWG Twisted Pair Strip 20 Conductor Strip			8'	-			
			176-2	82331-0003	#26 AWG Twisted Pair Strip 20 Conductor Strip			8'	-			
			176-3	82331-0004	#26 AWG Twisted Pair Strip 20 Conductor Strip			8'	-			
			176-4	82331-0005	#26 AWG Twisted Pair Strip 20 Conductor Strip			8'	-			
				80099-0058	Connector	AMP	220-1N104	1	1			
				80099-0056	Contacts - Female	AMP	220-S02	80	80			
			171	22053	Cable #171			(1)	(1)			
			171-1	82341-0006	Audio Cable - 2 Conductor Black			4½'	15½'			
				80100-0118	Connector	AMP	126-223	1	2			

*R.S. - RECOMMENDED AS CUSTOMER SPARES

DEPARTMENT | ISSUED BY | ISSUE DATE

LING ELECTRONICS A division of LING-TEMCO-VOUGHT, INC

ENGINEERING PARTS LIST

DATE 9-3-[illegible] PAGE [illegible] MANUAL ____
REV. L CONT'D ON [illegible] REQUISITION NO.

MODEL OR ASSY.	SERIAL NO.	SHOP ORDER	PON	QTY.	ACCOUNT NO.	M-DAY	DATE
ASDE-40 (ACR-10A)							

REV.	ITEM NO.	*R.S.	SYMBOL DESIG.	STOCK/DWG NUMBER	DESCRIPTION	MFG CODE	MANUFACTURER PART NUMBER	QTY. ASSY.	QTY. UNIT	CODE	KARDEX	PURCHASE ORDER
			172	22054	Cable #172			(1)	(1)			
			172-1	82341-0006	Audio Cable - 2 Conductor Black			1'	-			
			184	22064	Cable #184							
			184-1	82341-0006	2 Cond. Shielded Audio Cable	BEL	8450	6½'	6½'			
			184-2	82341-0013	#22 AWG 2 Caond. Shielded Type C/U per Mil.-W-16878			6½'	6½'			
				80100-0127	Connector	AMP	126-195	1	1			

*R.S. - RECOMMENDED AS CUSTOMER SPARES

DEPARTMENT | ISSUED BY | ISSUE DATE

LING ELECTRONICS A division of LING-TEMCO-VOUGHT, INC

ENGINEERING PARTS LIST

L [illegible] PAGE 32 MANUAL
REV. [illegible] CONT'D ON 33 REQUISITION NO.

MODEL OR ASSY.	SERIAL NO.	SHOP ORDER	PON	QTY.	ACCOUNT NO.	M-DAY	DA
ASDE-40 (ACR-10A)							

REV.	ITEM NO.	*R.S.	SYMBOL DESIG.	STOCK/DWG NUMBER	DESCRIPTION	MFG. CODE	MANUFACTURER PART NUMBER	QTY. ASSY.	QTY. UNIT	CODE	KARDEX	PURCH ORD
					Connector	AMP	126-223	1	-			
F			177	22059	Cable 177			(1)	(1)			
F			177 1 thru 4	82331-0010	#24 AWG 10 Conductor Strip			32'	77'			
F												
[illegible]				80099-0059	Connector	AMP	220-2N104	1	-			
[illegible]				80099-0057	Contacts - Male		220-P02	80	-			
[illegible]												
F			178	22060	Cable 178			(1)	(1)			
[illegible]			178-1	82331-0011	#24 AWG 5 Conductor Strip			7'	7'			
[illegible]					Connector	AMP	17-10150-1	1	-			
				80114-0034	Cable Clamp	AMP	220-6	3	3			
[illegible]					Clamp, for 17-10150-1	AMP	17-311-01	1	-			

*R.S. - RECOMMENDED AS CUSTOMER SPARES

DEPARTMENT | ISSUED BY | ISSUE DATE

LING ELECTRONICS A division of LING-TEMCO-VOUGHT, INC

ENGINEERING PARTS LIST

DATE 3-1-65 PAGE 1 MANUAL
REV. G CONT'D ON 34 REQUISITION NO.

MODEL OR ASSY.	SERIAL NO.	SHOP ORDER	PON	QTY.	ACCOUNT NO.	M-DAY	DATE
ASDE-40							

REV.	ITEM	*R.S.	SYMBOL DESIG.	STOCK/DWG NUMBER	DESCRIPTION	MFG CODE	MANUFACTURER PART NUMBER	QTY. ASSY.	QTY. UNIT	CODE	KARDEX	PURCHASE ORDER
F			167	22049	Cable 167			(1)	(1)			
F G			167-1 thru15	82331-0010	#24 AWG Single Conductor Strip 10 Conductor Strip			45'	-			
F G												
F			173	22055	Cable 173			(1)	(1)			
F			173-1	82341-0006	Audio Cable - 2 Conductor Black			6'	-			
F			174	22056	Cable 174			(1)	(1)			
F			174-1	82341-0006	Audio Cable - 2 Conductor Black			4'	-			
F F												
F F												
F F												
F F												
F F												

*R.S. - RECOMMENDED AS CUSTOMER SPARES

DEPARTMENT | ISSUED BY | ISSUE DATE

LING ELECTRONICS A division of LING-TEMCO-VOUGHT, INC

ENGINEERING PARTS LIST

DATE 7-3-65 PAGE 34 MANUAL
REV. L CONT'D ON 35 REQUISITION NO.

MODEL OR ASSY.	SERIAL NO.	SHOP ORDER	PON	QTY.	ACCOUNT NO.	M-DAY	DATE
ASDE-40 (Relay Assy)							

REV.	ITEM	*R. S.	SYMBOL DESIG.	STOCK/DWG NUMBER	DESCRIPTION	MFG CODE	MANUFACTURER PART NUMBER	QTY. ASSY.	QTY. UNIT	CODE	KARDEX	PURCHASED ORDER
D				43618	Assembly & Wiring - Relay Chassis Consisting of:			-	-			
				32634	Schematic			-	-			
				43606	Silkscreen			-	-			
				43605	Chassis			1	1			
			C1	82059-0027	Capacitor 20 µf 25V	AR	PTT-25020	1	1			
			C2	82020-0015K	Capacitor .1 µf 400V	SP	4TM-P10	1	1			
			CR1	82113-0007	Diode Zener	HOF	IN718A	1	1			
			CR 2&3	82111-0005	Diode	TI	TI 56	2	2			
			CR 4&5	82287-0086	Contact Protecter	ITT	15A5PA5	2	2			

* L - RECOMMENDED AS CUSTOMER SPARES

DEPARTMENT | ISSUED BY | ISSUE DATE

ENGINEERING PARTS LIST

DATE 1-25-67 PAGE 315 MANUAL
REV. 0 CONT'D ON 320 REQUISITION NO.

MODEL OR ASSY.	SERIAL NO.	SHOP ORDER	PON	QTY.	ACCOUNT NO.	M-DAY	DATE
ASDE-40 (Relay Assy)							

REV.	ITEM NO.	*R.S.	SYMBOL DESIG.	STOCK/DWG NUMBER	DESCRIPTION	MFG CODE	MANUFACTURER PART NUMBER	QTY. ASSY.	QTY. UNIT	CODE	KARDEX	PURCHASE ORDER
			J1	80100-0214	Connector 5 Pin Male	AMP	126-216	1	1			
			K1	82292-0038	Relay	SI	42ROZ-4000 ACG/SIL	1	1			
			K 2&3	82292-0037	Relay	SI	4R-8000-S/SIL	2	2			
			K4	82292-0039	Relay (Timer) S.P.D.T Motor Driven 0-9.5 Min	GTC	HAYDUN DIV. DA21-004D	1	1			
			Q1	82450-0026	Transistor	RCA	2N404	1	1			

*R.S. - RECOMMENDED AS CUSTOMER SPARES

DEPARTMENT | ISSUED BY | ISSUE DATE

LING ELECTRONICS A division of LING-TEMCO-VOUGHT INC

ENGINEERING PARTS LIST

DATE _____ PAGE 31 MANUAL _____

REV. 10 CONT'D ON 32 REQUISITION NO. _____

MODEL OR ASSY.	SERIAL NO.	SHOP ORDER	PON	QTY.	ACCOUNT NO.	M-DAY	DATE
ASDE-40 (Relay Assy)							

REV.	ITEM	*R.S.	SYMBOL DESIG.	STOCK/DWG NUMBER	DESCRIPTION	MFG CODE	MANUFACTURER PART NUMBER	QTY. ASSY.	QTY. UNIT	CODE	KARDEX	PURCH. ORDER
			R1	82230-0104J	Resistor 100K ½W 5%			1	1			
			TB1	80112-0099	Barrier Strip CJ	CJ	4-140Y	1	1			
			TB1	80113-0032	Marker Strip	CJ	MSX-4-140Y	1	1			
			TS 1&2	80112-0008	Terminal Strip	CJ	54B	2	2			
			XK 2&3	82280-0047	Socket 5 Pin	AMP	78-S5	2	2			
			XK1	82280-0048	Socket 8 Pin	AMP	78-S8	1	1			

*R.S. - RECOMMENDED AS CUSTOMER SPARES

DEPARTMENT | ISSUED BY | ISSUE DATE

ENGINEERING PARTS LIST

DATE _____ PAGE _____ MANUAL _____
REV. _____ CONT'D ON _____ REQUISITION NO.

MODEL OR ASSY.	SERIAL NO.	SHOP ORDER	PON	QTY.	ACCOUNT NO.	M-DAY	DATE

REV.	ITEM NO.	*R.S.	SYMBOL DESIG.	STOCK/DWG NUMBER	DESCRIPTION	MFG CODE	MANUFACTURER PART NUMBER	QTY. ASSY.	QTY. UNIT	CODE	KARDEX	PURCHASE ORDER
				44240	Schematic			-	-			
-				33249	P.C. Card Assembly Consisting of the following:			(1)	(15)			
				33248	P.C. Card			1	15			
			C1,C2 C3	82028-1101	Capacitor 100 µf 3VDC			3	45			
			C4,C5 C6	82060-0502K	Capacitor, Ceramic .005 µf 600V			3	45			
			CR1 - CR15	82111-0005	Diode	TI	TI56	15	225			
			K1,K2 K3	PS-10792	Reed Relay			3	45			
			Q1,Q4 Q7	82450-0026	Transistor		2N404	3	45			
			Q2,Q3 Q5,Q6 Q8,Q9	82450-0085	Transistor	RCA	2N649	6	90			
			R1,R10 R19	82254-0203K	Potentiometer 20K ½W			3	45			
			R2,R11 R20	PS-10167	Resistor, Light Dependent			3	45			
			C7,C8 C9	82027-0302	Capacitor .003 mfd 1000V			3	45			

*R.S. - RECOMMENDED AS CUSTOMER SPARES

DEPARTMENT	ISSUED BY	ISSUE DATE

ENGINEERING PARTS LIST

DATE _____ PAGE _____ MANUAL _____

REV. P CONT'D ON _____ REQUISITION NO. _____

MODEL OR ASSY.	SERIAL NO.	SHOP ORDER	PON	QTY.	ACCOUNT NO.	M-DAY	DATE
LDR Assembly ASDE-40							

REV.	ITEM NO.	*R.S.	SYMBOL DESIG.	STOCK/DWG NUMBER	DESCRIPTION	MFG CODE	MANUFACTURER PART NUMBER	QTY. ASSY.	QTY. UNIT	CODE	KARDEX	PURCHASE ORDER
			R3,R12 R21	82230-0392J	Resistor 3.9K 1/2W 5%			3	45			
			R4,R13 R22	82230-0223J	Resistor 22K 1/2W 5%			3	90			
			R5,R14 R23	82230-0911J	Resistor 910 ohm 1/2W 5%			3	45			
			R6,R15 R24	82254-0052K	Potentiometer 500 ohm 1/2W 10%			3	45			
			R7,R16 R25	82230-0123J	Resistor 12K 1/2W 5%			3	45			
			R8,R17 R26	82230-0223J	Resistor 22K 1/2W 5%			3	-			
			R9,R18 R27	82230-0222J	Resistor 2.2K 1/2W 5%			3	45			
			TP1-TP6	82430-0009	Turret Terminal			6	90			
			R28,R29 R30	82230-0512J	Resistor 5.1K 1/2W			3	90			

*R.S. - RECOMMENDED AS CUSTOMER SPARES

DEPARTMENT | ISSUED BY | ISSUE DATE

LING ELECTRONICS A division of LING-TEMCO-VOUGHT, INC

ENGINEERING PARTS LIST

DATE 2-21-66 PAGE 37 MANUAL
REV. P CONT'D ON 40 REQUISITION NO.

MODEL OR ASSY.	SERIAL NO.	SHOP ORDER	PON	QTY.	ACCOUNT NO.	M-DAY	DATE
ASDE 40 (Mag.Amp.Assy)							

REV.	ITEM NO.	*R.S.	SYMBOL DESIG.	STOCK/DWG NUMBER	DESCRIPTION	MFG CODE	MANUFACTURER PART NUMBER	QTY. ASSY.	QTY. UNIT	CODE	KARDEX	PURCHASE ORDER
P				32725	Schematic			-	-			
P				32791	P.C. Card Assy Consisting of			(1)	(45)			
P	1			32790	P.C. Card			1	45			
P			C1-~~C8~~	ES 10923	Capacitor Package at 3VDC 3-10,000μf			1	45			
P			C4	82027-0101K	Capacitor 100 pf 1000V			1	45			
P			CR1 Thru ~~CR5~~	82111-0005	Diode		TI-56	5	225			
P			Q1	82450-0003	Transitor		40053/2N3053	1	45			
P			Q2	82450-0026	Transistor		2N404	1	45			
P			R1	82254-0102K	Potentiometer 1K-½W-10%			1	45			
P			R2	82230-0511J	Resistor 510 ohm ±½W-5%							

*R.S. - RECOMMENDED AS CUSTOMER SPARES

DEPARTMENT | ISSUED BY | ISSUE DATE

ENGINEERING PARTS LIST

DATE 2-2-66 PAGE 52 MANUAL
REV. 1 CONT'D ON 41 REQUISITION NO.

MODEL OR ASSY.	SERIAL NO.	SHOP ORDER	PON	QTY.	ACCOUNT NO.	M-DAY	DATE
ASDE 40 (Mag.Amp. Assy)							

REV.	ITEM	*R.S.	SYMBOL DESIG.	STOCK/DWG NUMBER	DESCRIPTION	MFG CODE	MANUFACTURER PART NUMBER	QTY. ASSY.	QTY. UNIT	CODE	KARDEX	PURCH. SPEC.
F			R3	82230-09P1J	Resistor 9.1 ohm-½W-5%			1	45			
F			R4	82230-0512J	Resistor 5.1K-½W-5%			1	—			
F			R5	82230-0151J	Resistor 150 ohm-½W-5%			1	45			
F			R6	82230-0621J	Resistor 620 ohm-½W-5%			1	45			
F			R7	82230-0820J	Resistor 82 ohm-½W-5%			1	45			
F			R8	82230-0471J	Resistor 470 ohm-½W-5%			1	45			
XF			R9	82254-0501	Potentiometer 500 ohm-½W-10%			1	90			
F			R10	82230-0222J	Resistor 2.2K-½W-5%			1	45			
F			R11		Thermistor 1K-25°C	KENWALL	KA31L1	1	45			
F			R12	82254-0502	Potentiometer 5K-½W-10%			1	45			
F			R13	82233-N4993D	Resistor 499K-½W-½%			1	90			
F			R14	82254-0501	Potentiometer 500 ohm-½W-10%			1	-			

*R.S. - RECOMMENDED AS CUSTOMER SPARES

DEPARTMENT | ISSUED BY | ISSUE DATE

LING ELECTRONICS A division of LING-TEMCO-VOUGHT, INC.

ENGINEERING PARTS LIST

DATE 2-20-69 PAGE 41 MANUAL
REV. F CONT'D ON — REQUISITION NO.

MODEL OR ASSY.	SERIAL NO.	SHOP ORDER	PON	QTY.	ACCOUNT NO.	M-DAY
ASBE 40 (mag. Amp. Assy)						

REV.	ITEM	*R. S.	SYMBOL DESIG.	STOCK DWG. NUMBER	DESCRIPTION	MFG. CODE	MANUFACTURER PART NUMBER	QTY. ASSY.	QTY. UNIT	CODE	KARDEX	[illegible]
F			R15		Resistor (Selected Value)			1	45			
F			R16		Resistor 499K-½W-½%			1	-			
F			T1	PS10652	Torroid			1	45			
F				21531	Supplement To PS 10652			-	-			

[illegible] RECOMMENDED AS SUCCESSOR SPARE

LING ELECTRONICS [illegible] LING-TEMCO-VOUGHT INC.

ENGINEERING PARTS LIST

DATE 3-3-83 PAGE 1 MANUAL
REV. A CONT'D ON 2 REQUISITION NO.

MODEL OR ASSY.	SERIAL NO.	SHOP ORDER	PON	QTY.	ACCOUNT NO.	M-DAY	DATE
AMD-11			43137				

REV.	ITEM NO.	*R.S.	SYMBOL DESIG.	STOCK/DWG NUMBER	DESCRIPTION	MFG CODE	MANUFACTURER PART NUMBER	QTY. ASSY.	QTY. UNIT	CODE	KARDEX	PURCHASE ORDER
				20960	Schematic			-	-			
				31186	P.C. Board			1	1			
				31964	Component Layout			-	-			
	1			82430-0002	Solder Terminal	USECO	1300C	1	1			

*R.S. - RECOMMENDED AS CUSTOMER SPARES

DEPARTMENT | ISSUED BY | ISSUE DATE

LING ELECTRONICS A division of LING-TEMCO-VOUGHT, INC.

ENGINEERING PARTS LIST

DATE 9-3-65 PAGE 2 MANUAL
REV. A CONT'D ON 3 REQUISITION NO.

MODEL OR ASSY.	SERIAL NO.	SHOP ORDER	PON	QTY.	ACCOUNT NO.	M-DAY	DATE
AMD-11							

REV.	ITEM NO.	*R.S.	SYMBOL DESIG.	STOCK/DWG NUMBER	DESCRIPTION	MFG CODE	MANUFACTURER PART NUMBER	QTY. ASSY.	QTY. UNIT	CODE	KARDEX	PURCH. ORT.
	2		C1	82059-0256	Capacitor, Electrolytic 25 mfd 25V	AR	PWE25025	1	2			
	3		C2	82027-0121K	Capacitor, Silver Mica 120 pf 1KV	CRL	DD-121	1	1			
N	4		C3	82062-1101	Capacitor, Electrolytic 100 mfd 25V	IEI	FPA-100-G-0	1	1			
A	5		C4	82033-1501	Capacitor, Electrolytic 500 mfd 15V	IEI	FPA-500-E-5	1	1			
	6		C5	82027-0152K	Capacitor, Ceramic Disc 1500 mmfd 1KV	CRL	DD-152	1	1			
			C6	82059-0256	Capacitor, Electrolytic 25 mfd 25V	AR	PWE25025	1	-			
	7		C7	82060-0502K	Capacitor, Ceramic Disc .005 mfd 600V	ER	811-Z5V 502P	1	1			
	8		C8	82059-0057	Capacitor, Electrolytic 50 mfd 25V	AR	PWE25050	1	1			
	9		C9	82060-0203K	Capacitor, Ceramic Disc .02 mfd 600V	ER	841-Z5V 203P	1	1			
A	10		C10	82061-1101	Capacitor, Electrolytic 100 mfd 50V	IEI	HPA-100-K-1	1	1			

*R.S. - RECOMMENDED AS CUSTOMER SPARES

DEPARTMENT | ISSUED BY | ISSUE DATE

LING ELECTRONICS A division of LING-TEMCO-VOUGHT, INC

ENGINEERING PARTS LIST

DATE 9-3-65 PAGE 2 MANUAL
REV. A CONT'D ON 4 REQUISITION NO.

MODEL OR ASSY.	SERIAL NO.	SHOP ORDER	PON	QTY.	ACCOUNT NO.	M-DAY	DATE
AMD-11							

REV.	ITEM	*R.S.	SYMBOL DESIG.	STOCK/DWG NUMBER	DESCRIPTION	MFG CODE	MANUFACTURER PART NUMBER	QTY. ASSY.	QTY. UNIT	CODE	KARDEX	PURCHASE ORDER
A	11		CR1	82113-0005	Diode, Zener 24V 250 MW	HOF	1N723A	1	1			
A	12		CR2-5	82111-0005	Diode, Silicon	TI	TI56	4	4			
	13		Q1	82450-0001	Transistor, Silicon	TI	TI495	1	2			
			Q2	82450-0001	Transistor, Silicon	TI	TI495	1	-			
	14		Q3	82450-0003	Transistor	RCA	40053	1	1			
	15		Q4	82450-0002 or 82450-0003	Transistor, Silicon	TI RCA	TI486 or 40053	1	1			
	16		Q5	82450-0004	Transistor, Silicon	TI	TI487	1	1			
	17		Q6	82450-0005	Transistor, Germanium BEN	or DELCO DELCO TI	2N379 2N1159 2N251A	1	1			

*R.S. - RECOMMENDED AS CUSTOMER SPARES

DEPARTMENT	ISSUED BY	ISSUE DATE

ENGINEERING PARTS LIST

DATE 9-3-65 PAGE 4 MANUAL
REV. A CONT'D ON 5 REQUISITION NO.

MODEL OR ASSY.	SERIAL NO.	SHOP ORDER	PON	QTY.	ACCOUNT NO.	M-DAY	DATE
AMD-11							

REV.	ITEM NO.	*R.S.	SYMBOL DESIG.	STOCK/DWG NUMBER	DESCRIPTION	MFG CODE	MANUFACTURER PART NUMBER	QTY. ASSY.	QTY. UNIT	CODE	KARDEX	PURCHASE ORDER
	18		R1	82230-0103J	Resistor, Composition 10K 1/2W 5%	0		1	3			
	19		R2	82230-0104J	Resistor, Composition 100K 1/2W 5%	0		1	1			
			R3	82230-0103J	Resistor, Composition 10K 1/2W 5%	0		1	-			
A	20		R4	82254-0101	Potentiometer, Trimpot 100 ohm	BOU	3067P-1-101	1	1			
	21		R5	82230-0822J	Resistor, Composition 8.2K 1/2W 5%	0		1	2			
	22		R6	82230-0102J	Resistor, Composition 1K 1/2W 5%	0		1	2			
	23		R7	82230-0393J	Resistor, Composition 39K 1/2W 5%	0		1	1			
			R8	82230-0822J	Resistor, Composition 8.2K 1/2W 5%	0		1	-			
			R9	82230-0102J	Resistor, Composition 1K 1/2W 5%	0		1	-			
	24		R10	82230-0472J	Resistor, Composition 4.7K 1/2W 5%	0		1	1			
	25		R11	82230-0512J	Resistor, Composition 5.1K 1/2W 5%	0		1	1			
	26		R12	82230-0332J	Resistor, Composition 3.3K 1/2W 5%	0		1	1			

*R.S. - RECOMMENDED AS CUSTOMER SPARES

DEPARTMENT	ISSUED BY	ISSUE DATE

ENGINEERING PARTS LIST

DATE 9-3-65 PAGE 5 MANUAL
REV. A CONT'D ON REQUISITION NO.

MODEL OR ASSY.	SERIAL NO.	SHOP ORDER	PON	QTY.	ACCOUNT NO.	M-DAY	DATE
AMD-11							

REV.	ITEM NO.	*R.S.	SYMBOL DESIG.	STOCK/DWG NUMBER	DESCRIPTION	MFG CODE	MANUFACTURER PART NUMBER	QTY. ASSY.	QTY. UNIT	CODE	KARDEX	PURCHASE ORDER
A	27		R13	82254-0102	Potentiometer, Trimpot 1K	BOU	3067P-1-102	1	1			
	28		R14	82230-0271J	Resistor, Composition 270 ohm 1/2W 5%	O		1	1			
			R15	82230-0103J	Resistor, Composition 10K 1/2W 5%	O		1	-			
	29		R16	82230-0270J	Resistor, Composition 27 ohm 1/2W 5%	O		1	1			

*R.S. - RECOMMENDED AS CUSTOMER SPARES

DEPARTMENT | ISSUED BY | ISSUE DATE | RE

ENGINEERING PARTS LIST

DATE _____ PAGE 1 MANUAL _____

REV. A CONT'D ON _____ REQUISITION NO. _____

MODEL OR ASSY	SERIAL NO.	SHOP ORDER	PON	QTY.	ACCOUNT NO.	M-DAY	DAT
AMD-10			43137				

REV.	ITEM NO.	*R.S.	SYMBOL DESIG.	STOCK DWG NUMBER	DESCRIPTION	MFG CODE	MANUFACTURER PART NUMBER	QTY. ASSY.	QTY. UNIT	CODE	KARDEX	PURCHASE
				20960	Schematic			-	-			
				31186	P.C. Card			1	1			
				31191	Component Layout			-	-			
	1			82430-0001	Solder Terminal	USECO	1300B	1	1			

*R.S. - RECOMMENDED AS CUSTOMER SPARES

LING ELECTRONICS A division of LING-TEMCO-VOUGHT, INC

DEPARTMENT	ISSUED BY	ISSUE DATE

ENGINEERING PARTS LIST

DATE 3-3-65 PAGE 2 MANUAL
REV. A CONT'D ON 3 REQUISITION NO.

MODEL OR ASSY.	SERIAL NO.	SHOP ORDER	PON	QTY.	ACCOUNT NO.	M-DAY	DATE
AMD-10	-						

REV.	ITEM	*R.S.	SYMBOL DESIG.	STOCK/DWG NUMBER	DESCRIPTION	MFG CODE	MANUFACTURER PART NUMBER	QTY. ASSY.	QTY. UNIT	CODE	KARDEX	PURCHASE ORDER
	2		C1	82059-0256	Capacitor, Electrolytic 25 mfd 25V	AR	PWE25025	1	3			
	3		C2	82027-0121K	Capacitor, Ceramic 120 pfd 1KV	CRL	DD-121	1	1			
	4		C3	82059-0057	Capacitor, Electrolytic 50 mfd 25V	AR	PWE25050	1	1			
	5		C4	82033-1251	Capacitor, Electrolytic 250 mfd 15V	IEI	FPA-250-E-0	1	1			
	6		C5	82027-0152K	Capacitor, Ceramic Disc 1500 mmfd 1KV ± 20%	ER AR CD	Z5V D1-3 L10D15	1	1			
			C6	82059-0256	Capacitor, Electrolytic 25 mfd 25V	AR	PWE25025	1	-			
	7		C7	82060-0502K	Capacitor, Ceramic Disc .005 mfd 600V	ER	811-Z5V-502P	1	1			
			C8	82059-0256	Capacitor, Electrolytic 25 mfd 25V	AR	PWE25025	1	-			
	8		C9	82060-0203K	Capacitor, Ceramic Disc .02 mfd 600V	ER	841-Z5V-203P	1	1			
	9		C10	82061-1500	Capacitor, Electrolytic 50 mfd 50V	IEI	FPA-50-J-0	1	1			

*R.S. - RECOMMENDED AS CUSTOMER SPARES

DEPARTMENT | ISSUED BY | ISSUE DATE

ENGINEERING PARTS LIST

DATE _____ PAGE _____ MANUAL _____
REV. A CONT'D ON 4 REQUISITION NO.

MODEL OR ASSY.	SERIAL NO.	SHOP ORDER	PON	QTY.	ACCOUNT NO.	M-DAY	DATE
AMD-10							

REV	ITEM	*R.S.	SYMBOL DESIG.	STOCK/DWG NUMBER	DESCRIPTION	MFG CODE	MANUFACTURER PART NUMBER	QTY. ASSY.	QTY. UNIT	CODE	KARDEX	PURCHASE ORDER
	10		CR1	82113-0005	Diode, Zener 24V 250 mw	HOF	1N723A	1	1			
	11		CR2 - CR5	82111-0005	Diode, Silicon	TI	TI56	4	4			
	12		Q1	82450-0001	Transistor, Silicon	TI	TI495	1	2			
			Q2	82450-0001	Transistor, Silicon	TI	TI495	1	-			
	13		Q3	82450-0003	Transistor, Silicon	RCA	40053	1	1			
	14		Q4	82450-0002 or 82450-0003	Transistor, Silicon	TI RCA	TI486 40053 or	1	1			
	15		Q5	82450-0004	Transistor, Silicon	TI	TI487	1	1			
	16		Q6	82450-0005	Transistor, Germanium	BEN or DELCO DELCO TI	2N379 2N1159 2N251A	1	1			

*R.S. - RECOMMENDED AS CUSTOMER SPARES

DEPARTMENT | ISSUED BY | ISSUE DATE

LING ELECTRONICS A division of LING-TEMCO-VOUGHT, INC.

ENGINEERING PARTS LIST

DATE 9-3-65 PAGE 4 MANUAL
REV. A CONT'D ON 5 REQUISITION NO.

MODEL OR ASSY.	SERIAL NO.	SHOP ORDER	PON	QTY.	ACCOUNT NO.	M-DAY	DATE
AMD-10							

REV.	ITEM	*R.S.	SYMBOL DESIG.	STOCK/DWG NUMBER	DESCRIPTION	MFG CODE	MANUFACTURER PART NUMBER	QTY. ASSY.	QTY. UNIT	CODE	KARDEX	PURCHASE ORDER
	17		R1	82230-0103J	Resistor, Composition 10K 1/2W 5%	0 AB		1	1			
	18		R2	82230-0104J	Resistor, Composition 100K 1/2W 5%	0 AB		1	1			
	19		R3	82230-0103J	Resistor, Composition 10K 1/2W 5%	0 AB		1	2			
	20		R4	82254-0101	Potentiometer, Trimpot 100 ohm	BOU	3067P-1-101	1	1			
	21		R5	82230-0822J	Resistor, Composition 8.2K 1/2W 5%	0 AB		1	2			
	22		R6	82230-0102J	Resistor, Composition 1K 1/2W 5%	0 AB		1	1			
	23		R7	82230-0393J	Resistor, Composition 39K 1/2W 5%	0 AB		1	1			
			R8	82230-0822J	Resistor, Composition 8.2K 1/2W 5%	0 AB		1	-			
	24		R9	82230-0102J	Resistor, Composition 1K 1/2W 5%	0 AB		1	1			
	25		R10	82230-0472J	Resistor, Composition 4.7K 1/2W 5%	0 AB		1	1			
	26		R11	82230-0512J	Resistor, Composition 5.1K 1/2W 5%	0 AB		1	1			

*R.S. - RECOMMENDED AS CUSTOMER SPARES

DEPARTMENT	ISSUED BY	ISSUE DATE

LING ELECTRONICS A division of LING-TEMCO-VOUGHT, INC

ENGINEERING PARTS LIST

DATE 1-3-65 PAGE 5 MANUAL
REV. A CONT'D ON — REQUISITION NO.

MODEL OR ASSY.	SERIAL NO.	SHOP ORDER	PON	QTY.	ACCOUNT NO.	M-DAY	DATE
AMD-10							

REV.	ITEM NO.	*R.S.	SYMBOL DESIG.	STOCK/DWG NUMBER	DESCRIPTION	MFG CODE	MANUFACTURER PART NUMBER	QTY. ASSY.	QTY. UNIT	CODE	KARDEX	PURCHASE ORDER
	27		R12	82230-0332J	Resistor, Composition 3.3K 1/2W 5%	O AB		1	1			
A	28		R13	82254-0102	Potentiometer, Trimpot 1K	BOU	3067P-1-102	1	1			
	29		R14	82230-0271J	Resistor, Composition 270 ohm 1/2W 5%	O AB		1	1			
			R15	82230-0103J	Resistor, Composition 10K 1/2W 5%	O AB		1	-			
	30		R16	82230-0270J	Resistor 27 ohm 1/2W 10%	O AB		1	1			

*R.S. - RECOMMENDED AS CUSTOMER SPARES

DEPARTMENT | ISSUED BY | ISSUE DATE

ENGINEERING PARTS LIST

DATE [illegible] PAGE 1 MANUAL
REV. 3 CONT'D ON 2 REQUISITION NO.

MODEL OR ASSY.	SERIAL NO.	SHOP ORDER	PON	QTY.	ACCOUNT NO.	M-DAY
SSM-50B	50		43137			

		*R. S.	SYMBOL DESIG.	STOCK/DWG NUMBER	DESCRIPTION	MFG CODE	MANUFACTURER PART NUMBER	QTY. ASSY.	QTY. UNIT	CODE	KARDEX	PURCHASE ORDER
				50217	Schematic			-	-			
				44491	Silkscreen - Front Panel			-	-			
				21324	Silkscreen - Connector Deck			-	-			
					REFERENCE DRAWINGS							
				21010	Wiring Diagram - Type 45SW			-	-			
				43085	Assembly and Wiring Filter Deck			-	-			
				44829	Component and Buss Wiring Front Panel			-	-			
				44828	Wiring Front Panel			-	-			
			AR1	31691-3	6151 P.C. Card Assembly			-	-			

*R.S. - RECOMMENDED AS CUSTOMER SPARES

DEPARTMENT | ISSUED BY | TOTAL COST

LING ELECTRONICS LING-TEMCO-VOUGHT INC.

ENGINEERING PARTS LIST

DATE 12-29-65 PAGE 2 MANUAL
REV. A CONT'D ON 3 REQUISITION NO.

MODEL OR ASSY.	SERIAL NO.	SHOP ORDER	PON	QTY.	ACCOUNT NO.	M-DAY
SSM-50B						

REV.	INC.	*R.S.	SYMBOL DESIG.	STOCK/DWG NUMBER	DESCRIPTION	MFG CODE	MANUFACTURER PART NUMBER	QTY. ASSY.	QTY. UNIT	USE	KARDEX
				23063	Filter to Step Switch Wiring			-	-		
				23064	Light Wiring to Step Switch			-	-		
				21330	Wiring Connectors			-	-		
				44389	Cover			1	1		
				31694	Shield Differential Amplifier Section			1	1		
				31689	P.C. Card - 6151 Mounting			1	1		
				44496	Front Panel			1	1		
				42283	Partition			1	1		
				21022	Bracket - P.C. Connector			1	1		
				31660	Connector Deck			1	1		

*R.S. - RECOMMENDED AS CUSTOMER SPARE

DEPARTMENT

LING ELECTRONICS A Division of LING-TEMCO-VOUGHT, INC

ENGINEERING PARTS LIST

PAGE 3 CONTINUATION 4 REVISION NO.

MODEL OR ASSY.	SERIAL NO.	SHOP ORDER	PON	QTY.	ACCOUNT NO.	M-DAY
SSM-50B						

		*R. S.	SYMBOL DESIG.	STOCK DWG. NUMBER	DESCRIPTION	MFG. CODE	MANUFACTURER PART NUMBER	QTY. ASSY.	QTY. UNIT	CODE	KARDEX
				5799	Chassis			1	1		
				42647	Chassis - Left Side			1	1		
				42648	Chassis - Right Side			1	1		
			AR1	82007-0010	Amplifier Differential Operational	PHIL	P85A	1	1		

*R.S. - RECOMMENDED AS CUSTOMER SPARE

LING ELECTRONICS LINE LING-TEMCO-VOUGHT INC.

ENGINEERING PARTS LIST

DATE [illegible] PAGE [illegible] MANUAL
REV. — CONT'D ON — REQUISITION NO.

MODEL OR ASSY.	SERIAL NO.	SHOP ORDER	PON	QTY.	ACCOUNT NO.	M-DAY	DATE
SSM-50B							

		*R. S.	SYMBOL DESIG.	STOCK/DWG NUMBER	DESCRIPTION	MFG CODE	MANUFACTURER PART NUMBER	QTY. ASSY.	QTY. UNIT	CODE	KARDEX
					Filter Deck Consisting of:						
				31192	Printed Circuit Card			5	5		
				82344-0003	A.C. Line Cord 18-2 Type SJO			4'	4'		
			P1	82410-0009	A.C. Plug	HU	7428	1	1		
				82287-0084	Lubrication Kit for Stepping Relay NOTE: Enclose Kit in Relay Housing after final test. Installation Tag should warn customer to remove same.	AUTO	RZ-79	1	1		

*R.S. - RECOMMENDED AS CUSTOMER SPARE

DEPARTMENT

LING ELECTRONICS [illegible] LING-TEMCO-VOUGHT INC

ENGINEERING PARTS LIST

DATE [illegible] PAGE 5 MANUAL
REV. [illegible] CONT'D ON 6 REQUISITION NO.

MODEL OR ASSY.	SERIAL NO.	SHOP ORDER	PON	QTY.	ACCOUNT NO.	M-DAY
SSM-50B						

		*R. S.	SYMBOL DESIG.	STOCK DWG NUMBER	DESCRIPTION	MFG CODE	MANUFACTURER PART NUMBER	QTY. ASSY.	QTY. UNIT	CODE	KARDEX
			C1	82060-0203K	Capacitor, Ceramic .02 mfd 600V	ERIE	841Z5V203P	1	4		
			C2		Capacitor, Ceramic .02 mfd 600V	ERIE	841Z5V203P	1	-		
			C3-C48	82028-1101	Capacitor, Electrolytic 100 mfd 3WVDC			46	46		
			C49		Not Used						
			C50	82016-0016K	Capacitor, Mylar 1 mfd 200V	CD	WMF-2W1	1	1		
			C51	82026-0121J	Capacitor, Mica 120 pf 500V	ARCO	CM-15-E-121J	1	1		
			C52	82026-0101J	Capacitor, Mica 100 pf 500V	ARCO	CM-15-E-101J	1	1		
			C53	82051-0004	Capacitor, Variable Ceramic 7-45 pf N500 7-45	ER	CV11C450	1	1		
			C54		Capacitor, Ceramic .02 mfd 600V	ERIE	841Z5V203P	1	-		
			C55		Capacitor, Ceramic .02 mfd 600V	ERIE	841Z5V203P	1	-		

LING ELECTRONICS

ENGINEERING PARTS LIST

DATE [illegible] PAGE 5 MANUAL
REV. [illegible] CONT'D ON 7 REQUISITION NO.

MODEL OR ASSY.	SERIAL NO.	SHOP ORDER	PON	QTY.	ACCOUNT NO.	M-DAY	CATE
SSM-50B							

REV.	ITEM NO.	*R. S.	SYMBOL DESIG.	STOCK DWG NUMBER	DESCRIPTION	MFG CODE	MANUFACTURER PART NUMBER	QTY. ASSY.	QTY. UNIT	CODE	KARDEX	[illegible]
			CR1-CR45	82110-0026	Diode, Silicon Rectifier 750 MA 600V PIV	SY SKT	1N2071 1N2484(F6)	45	52			
			CR48	82113-0008	Diode, Zener 20 MW 20V	HOF	1N721A	1	1			
			CR49	82113-0007	Diode, Zener 20 MW 15V	HOF	1N718A	1	2			
			CR50		Diode, Zener 20 MW 15V	HOF	1N718A	1	-			
			CR51 CR52		Diode, Silicon Rectifier 750 MA 600V PIV	SY	1N2071	2	-			

*R.S. - RECOMMENDED AS CUSTOMER SPARES

LING ELECTRONICS Approved LING-TEMCO-VOUGHT INC

DEPARTMENT | [illegible] | [illegible] DATE

ENGINEERING PARTS LIST

DATE [illegible] PAGE [illegible] MANUAL
REV [illegible] CONTINUATION [illegible] REQUISITION NO.

MODEL OR ASSY.	SERIAL NO.	SHOP ORDER	PON	QTY.	ACCOUNT NO.	M-DAY	DATE
SSM-50B							

R.S.	SYMBOL DESIG.	STOCK/DWG NUMBER	DESCRIPTION	MFG. CODE	MANUFACTURER PART NUMBER	QTY. ASSY.	QTY. UNIT	CODE	KARDEX	POSITION ORDER
		21320	Bracket, Relay Mounting			4	4			
		82136-0003	Handle	GAXY	28-17	2	2			
		80115-0006	Knob, Skirted	RAY	90-3-2	1	1			
		82470-0012	Lug	CJ	Y-142	10	10			
		82299-0006	Rod, threaded 6-32 x 3			4	4			
		82121-0007	Sound Absorbent Material Deeco-foam, adhesive backed 12" x 36" x 1/2"	DEFT		1	1			
		85201-1206	Spacer 1/4 hex x 3/8 long			20	20			
		82475-0013	Washer, internal lock	GC	7326	8	8			
		85181-1208	Spacer 6-32 x 1/4 hex x 1/2 long			4	4			

*R.S. = RECOMMENDED AS CUSTOMER SPARES

DEPARTMENT | ISSUED BY | ISSUE DATE

LING ELECTRONICS [illegible] LING-TEMCO-VOUGHT INC

ENGINEERING PARTS LIST

DATE [illegible] PAGE [illegible] MANUAL
REV. [illegible] CONTD ON [illegible] REQUISITION NO.

MODEL OR ASSY.	SERIAL NO.	SHOP ORDER	PON	QTY.	ACCOUNT NO.	M-DAY
SSM-50B						

		*R. S.	SYMBOL DESIG.	STOCK/DWG NUMBER	DESCRIPTION	MFG CODE	MANUFACTURER PART NUMBER	QTY.	QTY. UNIT			
				82331-0002	Wire, 10 pair twisted red	SS	ST-2026-7B	8'	8'			
				82331-0004	Wire, 10 pair twisted orange	SS	ST-2026-7B	8'	8'			
				82331-0003	Wire, 10 pair twisted yellow	SS	ST-2026-7B	8'	8'			
				82331-0005	Wire, 10 pair twisted brown	SS	ST-2026-7B	8'	8'			
				82331-0001	Wire, 10 pair twisted blue	SS	ST-2026-7B	8'	8'			
			J1	80100-0106	Receptacle, female 15 contact	AMP	17-101-50-1	1	1			
			J2	80099-0059	Receptacle 104 contact	AMP	220-2N104	1	1			
				80099-0057	Contact, male	AMP	220-P02	80	80			
			J3	80099-0100	Receptacle 52 contact	AMP	220-1N052	1	1			

*R.S. - RECOMMENDED AS CUSTOMER SPARE

DEPARTMENT | ISSUED BY | ISSUE DATE

LING ELECTRONICS [illegible] LING-TEMCO-VOUGHT INC

ENGINEERING PARTS LIST

DATE [illegible] PAGE 9 MANUAL
REV. [illegible] CONT'D ON 10 REQUISITION NO.

MODEL OR ASSY.	SERIAL NO.	SHOP ORDER	PON	QTY.	ACCOUNT NO.	M-DAY	DATE
SSM-50B							

R.S.	TN. EC. M	*R. S.	SYMBOL DESIG.	STOCK/DWG NUMBER	DESCRIPTION	MFG CODE	MANUFACTURER PART NUMBER	QTY. ASSY.	QTY. UNIT		KARDEX	
				80099-0056	Contact - Female	AMP	220-S02	52	52			
			J4	80100-0214	Receptacle 5 Contact	AMP	126-216	1	1			
			J5	80100-0303	Receptacle 9 Contact	AMP	126-221	1	1			
			K1	82285-0082	Type 45 Rotary Switch: 24VDC Coil with vatistor across coil 5 levels 52 positions Level 1 phosphor bronze bridging, Level 2 phosphor bronze non-bridging Levels 3,4,5 gold non-bridging Interrupter Springs 1 BIC off normal Springs 2C	AUTO	PW-331145-GHAF	1	1			
			K2	82292-0020	Relay 2, 1600 ohm Coil 120 VDC SPST	AUTO	RP71	1	1			
				82287-0010	Mounting Kit, Relay	AE	RC35	1	1			

*R.S. - RECOMMENDED AS CUSTOMER SPARES

DEPARTMENT | ISSUED BY | ISSUE DATE

LING ELECTRONICS A DIV. LING-TEMCO-VOUGHT INC

ENGINEERING PARTS LIST

DATE [illegible] PAGE [illegible] MANUAL ____
REV ____ CONT'D ON ____ REQUISITION NO.

MODEL OR ASSY.	SERIAL NO.	SHOP ORDER	PON	QTY.	ACCOUNT NO.	M-DAY	DATE
SSM-50B							

REV.	ITEM NO.	*R. S.	SYMBOL DESIG.	STOCK/DWG NUMBER	DESCRIPTION.	MFG CODE	MANUFACTURER PART NUMBER	QTY. ASSY.	QTY. UNIT	CODE	KARDEX	[illegible]
				82012-0023	Relay Mounting Bracket K2 or Relay Mounting Bracket	AUTO	RB94	1	1			

*R.S. - RECOMMENDED AS CUSTOMER PART

LING ELECTRONICS [illegible] LING-TEMCO-VOUGHT, INC.

[illegible] | [illegible] | [illegible]

ENGINEERING PARTS LIST

PAGE 11 MANUAL
A CONT'D ON 12 REQUISITION NO.

MODEL OR ASSY.	SERIAL NO.	SHOP ORDER	PON	QTY.	ACCOUNT NO.	M-DAY	DATE
SSM-50B							

REV.	ITEM NO.	*R.S.	SYMBOL DESIG.	STOCK/DWG NUMBER	DESCRIPTION	MFG CODE	MANUFACTURER PART NUMBER	QTY. ASSY.	QTY. UNIT	CODE	KARDEX	PURCHASING
			R1-R45	82230-0563J	Resistor, Molded Composition 56K 1/2W	O		45	45			
			R48	82269-0058	Resistor. 30K 5W 5%	O		1	1			
			R49	82230-0103J	Resistor, Molded Composition 10K 1/2W	O		1	2			
			R50	82230-0303J	Resistor, Composition 30K 1/2W 5%	O		1	1			
			R51	82264-1752F	Resistor, Wirewound 17.5K 10W	DALE	RH 10	1	2			
			R52		Resistor, Wirewound 17.5K 10W	DALE	RH 10	1	-			
			R53	82230-0470J	Resistor, Composition 47 ohm 1/2W	O		1	2			
			R54		Resistor, Composition 47 ohm 1/2W	O		1	-			
			R55	82269-0015	Resistor 1500 ohm 5W 5%	SP	Type 452E	1	1			
			R56	82229-0220J	Resistor 22 ohm 1/4W	O		1	3			
			R57		Resistor, Molded Composition 22 ohm 1/4W	O		1	-			
			R58		Resistor, Molded Composition 22 ohm 1/4W	O		1	-			

*R.S. - RECOMMENDED AS CUSTOMER SPARES

LING ELECTRONICS LING-TEMCO-VOUGHT, INC.

ENGINEERING PARTS LIST

DATE 1-13-[illegible] PAGE 2 MANUAL
REV. CONT'D ON 13 REQUISITION NO.

MODEL OR ASSY.	SERIAL NO.	SHOP ORDER	PON	QTY.	ACCOUNT NO.	M-DAY	DATE
SSM-50B							

REV.	ITEM NO.	*R.S.	SYMBOL DESIG.	STOCK/DWG NUMBER	DESCRIPTION	MFG CODE	MANUFACTURER PART NUMBER	QTY. ASSY.	QTY. UNIT	CODE	KARDEX	PURCHASE ORDER
			R59	82229-0270J	Resistor, Molded Composition 27 ohm 1/4W	O		1	1			
			R60	82229-0330J	Resistor, Molded Composition 33 ohm 1/4W	O		1	1			
			R61	82229-0620J	Resistor, Molded Composition 62 ohm 1/4W	O		1	1			
			R62-R101	82229-0101J	Resistor, Molded Compostioon 100 ohm 1/4W	O		40	40			
			R102 S48	82257-0019	Potentiometer (with SPST Switch) 50K 2W Type J	AB	JS1N056P-503UA	1	1			
			R103	82233-0155F	Resistor, Type DCC 1.5 meg 1/2W 1%	IRC	DCC RN20X	1	3			
			R104		Resistor, Type DCC 1.5 meg 1/2W 1%	IRC	DCC RN20X	1	-			
			R105		Resistor, Type DCC 1.5 meg 1/2W 1%	IRC	DCC RN20X	1	-			
			R106	82233-1474F	Resistor 1.47 meg 1/2W 1%	IRC	DCC RN20X	1	1			
			R107	82252-0503K	Potentiometer, Carbon 50K 2W Type AB	O	CLU5031	1	1			
			R108		Resistor, Molded Composition 10K 1/2W	O		1	-			
			R109	82230-0102J	Resistor, Composition 1K 1/2W	O		1	1			

*R.S. - RECOMMENDED AS CUSTOMER SPARES

DEPARTMENT ISSUED BY ISSUE DATE

LING ELECTRONICS A division of LING-TEMCO-VOUGHT, INC

ENGINEERING PARTS LIST

DATE 3-6-80 PAGE 13 MANUAL
SH. 2 CONT'D ON 14 REQUISITION NO.

MODEL OR ASSY.	SERIAL NO.	SHOP ORDER	PON	QTY.	ACCOUNT NO.	M-DAY	DATE
SSM-50B							

REF.	ITEM	*R.S.	SYMBOL DESIG.	STOCK/DWG NUMBER	DESCRIPTION	MFG CODE	MANUFACTURER PART NUMBER	QTY. ASSY.	QTY. UNIT	COST	KARDEX	
			R111-R202	82230-0333J	Resistor 33K 1/2W 5%	O		92	92			
			R203-R248	82233-0101F	Resistor 100 ohm 1/2W 1%	IRC	RN 20X 1000F	46	46			
			IS1-IS45	82285-0056	Switch Illuminated, Amber	GRHL	NO-40-1 Amber	45	45			
			T1	82308-0027	Transformer, Filament 120 volt to 24 VCT @ 1.0a	T	F-40X	1	1			
			T2	82311-0002	Transformer 115 volt to 115 volt 35VA	T	N-51X	1	1			
			X1	80101-0011	Socket, Printed Circuit Card	AMP	143-012-01	1	1			

*R.S. - RECOMMENDED AS CUSTOMER SPARE

ENGINEERING PARTS LIST

DATE [illegible] PAGE 4 MANUAL
REV. - CONT'D ON [illegible] REQUISITION NO.

MODEL OR ASSY.	SERIAL NO.	SHOP ORDER	PON	QTY.	ACCOUNT NO.	M-DAY	DATE
SSM-50B							

REV.	ITEM NO.	*R.S.	SYMBOL DESIG.	STOCK/DWG NUMBER	DESCRIPTION	MFG CODE	MANUFACTURER PART NUMBER	QTY. ASSY.	QTY. UNIT	CODE	KARDEX	PURCHASE ORDER
					Relay Control Card RCC-10 Consisting of:							
				21237	Schematic Diagram			-	-			
				31547	Printed Circuit Card			1	1			
				31548	Component Layout			-	-			
			C1	82061-1500	Capacitor, Electrolytic 50 µfd 50V	IEI	FPA-50-J-0	1	2			
			C2		Capacitor, Electrolytic 50 µfd 50V	IEI	FPA-50-J-0	1	-			
			C3	82061-1250	Capacitor 25 mfd 50V	IEI	FPA-25-J-0	1	1			
			C4	82063-0400	Capacitor, Electrolytic 40 µfd -250V	AR	PRS 1580	1	1			

*R.S. - RECOMMENDED AS CUSTOMER SPARES

DEPARTMENT | ISSUED BY | [illegible]

LING ELECTRONICS Division LING-TEMCO-VOUGHT INC

ENGINEERING PARTS LIST

DATE [illegible] PAGE 15 MANUAL
REV. B CONT'D ON [illegible] REQUISITION NO.

MODEL OR ASSY.	SERIAL NO.	SHOP ORDER	PON	QTY.	ACCOUNT NO.	M-DAY	DATE
SMM-50B							

REV.	ITEM NO.	*R. S.	SYMBOL DESIG.	STOCK/DWG NUMBER	DESCRIPTION	MFG CODE	MANUFACTURER PART NUMBER	QTY. ASSY.	QTY. UNIT	CODE	KARDEX	PURCHASE ORDER
			CR1	82110-0026	Diode, Silicon Rectifier 750 MA 600V PIV	SY SKT	1N2071 1N2484 (F6)	1	-			
			CR2		Diode, Silicon Rectifier 750 MA 600V PIV	SY SKT	1N2071 1N2484 (F6)	1	-			
			CR3		Diode, Silicon Rectifier 750 MA 600V PIV	SY SKT	1N2071 1N2484 (F6)	1	-			
			CR4		Diode, Silicon Rectifier 750 MA 600V PIV	SY SKT	1N2071 1N2484 (F6)	1	-			
			CR5		Diode, Silicon Rectifier 750 MA 600V PIV	SY SKT	1N2071 1N2484 (F6)	1	-			
			SCR1	82112-0009	Rectifier, Silicon Controlled 50 Volt 6.0 Amp	GE	2N1771	1	1			
			Q1	82450-0019	Transistor, Unijunction 50 MA 35 Volt	GE	2N1671	1	1			

*R.S. - RECOMMENDED AS CUSTOMER SPARE

DEPARTMENT | ISSUED BY | ISSUE DATE

LING ELECTRONICS [illegible] LING-TEMCO-VOUGHT INC

ENGINEERING PARTS LIST

DATE [illegible] PAGE 1[illegible] MANUAL ____
REV. ____ CONT'D ON ____ REQUISITION NO. ____

MODEL OR ASSY.	SERIAL NO.	SHOP ORDER	PON	QTY.	ACCOUNT NO.	M-DAY	DATE
SMM-50B							

REV.	ITEM NO.	*R.S.	SYMBOL DESIG.	STOCK/DWG NUMBER	DESCRIPTION	MFG CODE	MANUFACTURER PART NUMBER	QTY. ASSY.	QTY. UNIT	CODE	KARDEX	PURCHASE ORDER
			R1	82232-0681J	Resistor, Molded Composition 680 ohm 2W	0		1	1			
			R2	82230-0151J	Resistor, Molded Composition 150 ohm 1/2W	0		1	1			
			R3	82230-0512J	Resistor, Molded Composition 5.1K 1/2W	0		1	1			
			R4	82230-0270J	Resistor, Molded Composition 27 ohm 1/2W	0		1	1			
			R5	82230-0100J	Resistor, Molded Composition 10 ohm 1/2W	0		1	1			

*R.S. - RECOMMENDED AS CUSTOMER SPARES

DEPARTMENT | PANEL BY | ISSUE UNIT

LING ELECTRONICS Division LING-TEMCO-VOUGHT INC

ENGINEERING PARTS LIST

CONT'D ON

PD-10B	145		PON 43137		ACCOUNT NO.	

STOCK/DWG NUMBER	DESCRIPTION	MFG CODE	MANUFACTURER PART NUMBER	QTY. ASSY.	QTY. UNIT	KARDEX
31301	Schematic			-	-	
42243	Silk Screen (Part No. 42242)			-	-	
31477	Wiring & Component Layout			-	-	

LING ELECTRONICS

ENGINEERING PARTS LIST

ASSY	SERIAL NO.	SHOP ORDER	PON	QTY.	ACCOUNT NO.	M-DAY
PD-10B						

IN M.	R. S.	SYMBOL DESIG.	STOCK/DAC NUMBER	DESCRIPTION	MFR CODE	MANUFACTURER'S PART NUMBER	QTY. ASSY.	QTY. UNIT	CHG	MARK X
			42242	Panel (Silk Screen per Dwg.42243)	WYCO		1	1		
			80143-0009	Fuse Holder, Indicating 120V Neon	LI	344125	3	3		
			82186-0025	Lamp Holder, Red Jewel	DI	514-001-111	1	1		
			80113-0001	Marker Strip	CJ	MSX-10-142	2	2		
		F1	82145-0017	Fuse 3 AG Slow-Blo 5A	LI	313005	1	2		
		F2	82145-0017	Fuse 3 AG Slow-Blo 5A	LI	313005	1	-		
		F3	82145-0013	Fuse 3 AG Slow-Blo 3A	LI	313003	1	1		
		IS1	82185-0002	Lamp, Incadescent 120V 3W Candelabra Screw	GE	3S6	1	1		

LING ELECTRONICS

ENGINEERING PARTS LIST

MODEL OR ASSY.	SERIAL NO.	SHOP ORDER	MDN	QTY.	ACCOUNT NO.	M-DAY	DATE
PD-10B							

REF.	ITEM	*R. S.	SYMBOL DESIG.	STOCK/DWG NUMBER	DESCRIPTION	MFG CODE	MANUFACTURER PART NUMBER	QTY. ASSY.	QTY. UNIT	CODE	KARDEX	ITEM CHANGE
			S1	82087-0008	Circuit Breaker Curve 4 15 Amp 120 VAC 60 cps	HE	AM12	1	1			
			TB1-2	80112-0044	Terminal Strip	CJ	10-142	2	2			

*R.S. - RECOMMENDED ALTERNATE SOURCE

DEPARTMENT | DATE | DATE

LING ELECTRONICS A DIVISION OF LING-TEMCO-VOUGHT, INC

ENGINEERING PARTS LIST

DATE _____ PAGE 1 MANUAL _____

REV. _____ CONT'D ON 2 REQUISITION NO. _____

MODEL OR ASSY.	SERIAL NO.	SHOP ORDER	PON	QTY.	ACCOUNT NO.	M-DAY	DA
SE-40A	55		43137				

REV.	ITEM NO.	*R.S.	SYMBOL DESIG.	STOCK/DWG NUMBER	DESCRIPTION	MFG CODE	MANUFACTURER PART NUMBER	QTY. ASSY.	QTY. UNIT	CODE	KARDEX	PURCH. OR
				32782	Schematic			-	-			
					SILK SCREEN DRAWINGS							
				44490	Front Panel Assembly			-	-			
					REFERENCE DRAWINGS							
B				45117	Slide Wire Assembly - Arrangement 1			-	-			
B				45118	Slide Wire Assembly - Arrangement 2			-	-			
				5737	Chassis Assembly Level Control			-	-			
				44367	Interconnecting Cable To CM-40			-	-			

*R.S. - RECOMMENDED AS CUSTOMER SPARES

DEPARTMENT | ISSUED BY | ISSUE DATE

LING ELECTRONICS A division of LING-TEMCO-VOUGHT INC

ENGINEERING PARTS LIST

DATE 2-1-[illegible] PAGE 2 MANUAL
REV. B CONT'D ON 3 REQUISITION NO.

MODEL OR ASSY.	SERIAL NO.	SHOP ORDER	PON	QTY.	ACCOUNT NO.	M-DAY	DATE
SE-40A							

REV.	ITEM	*R.S.	SYMBOL DESIG.	STOCK/DWG NUMBER	DESCRIPTION	MFG CODE	MANUFACTURER PART NUMBER	QTY. ASSY.	QTY. UNIT	CODE	KARDEX	PURCH. ORDER
				5737	Chassis Assembly Level Control			(1)	(1)			
P				45117	Slide Wire Assembly Arrangement #1			(10)	(10)			
	1			43419	Frame			1	20			
	2			20543	Slider			2	40			
	3			20545	Arm			2	40			
	4			20546	Slide Rod			4	80			
	5			2540	Drum			4	80			
	6			20844	Pulley Idler			6	110			
	7			82257-0010	Potentiometer (with Hardware)	AB	JA1G032S102DA	2	40			
	8			82470-0016	Eyelet - Brass .183 O.D. x .187 length under Flange	STIM	A2201	6	110			
A	9			83020-0001	Dial Cord, "TV No Stretch" .028 dia.	GC	GC-88	223 ft.	223 ft.			

*R.S. - RECOMMENDED AS CUSTOMER SPARES

LING ELECTRONICS A division of LING-TEMCO-VOUGHT INC

DEPARTMENT ISSUED BY ISSUE DATE

ENGINEERING PARTS LIST

DATE 3-31-60 PAGE 3 MANUAL
REV. B CONT'D ON 4 REQUISITION NO.

MODEL OR ASSY.	SERIAL NO.	SHOP ORDER	PON	QTY.	ACCOUNT NO.	M-DAY	DATE
SE-40A							

REV.	ITEM	*R.S.	SYMBOL DESIG.	STOCK DWG NUMBER	DESCRIPTION	MFG CODE	MANUFACTURER PART NUMBER	QTY. ASSY.	QTY. UNIT	CODE	KARDEX	PURCHASE ORDER
				82610-0001	Spring .020 Dia. x 3/16W x 9/16 Lg,	WA	Type 3	2	40			
				PS 10139	Potentiometer (with Hardware)	AB		2	40			
				85281-1200	Lug, Short Barrel for #6 Stud	API	34194	2	40			
				22552	Connector Assembly Consisting of the following:			(1)	(20)			
				22552-3	Plug Strip - Female Make From AMP #221-1260			1	20			
				80099-0057	Contact - Male	AMP	220-P02	8	160			
				80099-0086	Plug Strip, Female	AMP	221-1260	-	-			
				45118	Slide Wire Assembly Arrangement 2			(10)	(10)			
				43419	Frame			1	-			
				20543	Slider			2	-			
				20545	Arm			2	-			
				20546	Slide Rod			4	-			

*R.S. - RECOMMENDED AS CUSTOMER SPARES

DEPARTMENT | ISSUED BY | ISSUE DATE

LING ELECTRONICS A division of LING-TEMCO-VOUGHT INC

ENGINEERING PARTS LIST

DATE _____ PAGE 1 MANUAL _____
REV. B CONT'D ON 5 REQUISITION NO. _____

MODEL OR ASSY.	SERIAL NO.	SHOP ORDER	PON	QTY.	ACCOUNT NO.	M-DAY	DATE
SE-40A							

REV.	ITEM	*R.S.	SYMBOL DESIG.	STOCK/DWG NUMBER	DESCRIPTION	MFG CODE	MANUFACTURER PART NUMBER	QTY. ASSY.	QTY. UNIT	CODE	KARDEX	PURCHASE
				2540	Drum			4	-			
				20844	Pulley Idler			5	-			
B					Potentiometer (with Hardware)	AB	JA1G032S102DA	2	-			
					Eyelet, Under Flange .183 O.D. x .187 length	STIM	A2201	5	-			
A					Dial Cord, "TV No Stretch" .028 dia.	GC	GC-88	-	-			
E												
					Spring	WA	Type 3	4	-			
C				PS-10139	Potentiometer (with Hardware)	AB		2	-			
					Lug, Short Barrel for #6 Stud	API	34194	2	-			
				22552	Connector Assembly Consisting of the following:			1	-			
P				22552-3	Plug Strip, Female (Make from AMP #221-1260)			1	-			
P					Contact, Male	AMP	220-P02	8	-			

*R.S. - RECOMMENDED AS CUSTOMER SPARES

LING ELECTRONICS A division of LING-TEMCO-VOUGHT, INC	DEPARTMENT	ISSUED BY	ISSUE DATE

ENGINEERING PARTS LIST

DATE [illegible] PAGE 5 MANUAL

REV. B CONT'D ON - REQUISITION NO.

MODEL OR ASSY.	SERIAL NO.	SHOP ORDER	PON	QTY.	ACCOUNT NO.	M-DAY	DATE
SE-40A							

REV.	ITEM	*R.S.	SYMBOL DESIG.	STOCK/DWG NUMBER	DESCRIPTION	MFG CODE	MANUFACTURER PART NUMBER	QTY. ASSY.	QTY. UNIT	CODE	KARDEX	PURCHASE ORDER
C					Plug Strip, Female	AMP	221-1260	-	-			
	16			44490	Front Panel Complete			1	1			
	17			42312	Front Panel Assembly Part of 44490			-	-			
				41616	Front Panel Part of 42312			-	-			
				41637	Bracket, Top Part of 42312			-	-			
				42311	Bracket, Bottom Part of 42312			-	-			
	18			20548	Knob			40	40			
	19			82136-0003	Handle	GAXY	28-17	2	2			
	20			21067-1	Bracket			1	1			
	21			21067-2	Bracket			1	1			

*R.S. - RECOMMENDED AS CUSTOMER SPARES

DEPARTMENT | ISSUED BY | ISSUE DATE

LING ELECTRONICS A division of LING-TEMCO-VOUGHT INC

ENGINEERING PARTS LIST

DATE _____ PAGE _____ MANUAL _____

REV. A CONT'D ON _____ REQUISITION NO. _____

MODEL OR ASSY.	SERIAL NO.	SHOP ORDER	PON	QTY.	ACCOUNT NO.	M-DAY	DATE
PA-2	232		43137				

REV	ITEM	*R.S.	SYMBOL DESIG.	STOCK/DWG NUMBER	DESCRIPTION	MFG CODE	MANUFACTURER PART NUMBER	QTY. ASSY.	QTY. UNIT	CODE	KARDEX	PURCHASE ORDER
				31157	Schematic		-	-	-			
				42606	Component Layout			-	-			
				42041	Chassis			-	-			
				42268	Chassis Complete			1	1			
				82430-0006	Terminal, Insulated Standoff	USEC	1417	4	4			

*R.S. - RECOMMENDED AS CUSTOMER SPARES

DEPARTMENT | ISSUED BY | ISSUE DATE

LING ELECTRONICS A division of LING-TEMCO-VOUGHT INC

ENGINEERING PARTS LIST

DATE 2-[illegible]-65 PAGE 2 MANUAL
REV. A CONT'D ON 3 REQUISITION NO.

MODEL OR ASSY.	SERIAL NO.	SHOP ORDER	PON	QTY.	ACCOUNT NO.	M-DAY	DATE
PA-2							

REV.	INCM	*R.S.	SYMBOL DESIG.	STOCK/DWG NUMBER	DESCRIPTION	MFG CODE	MANUFACTURER PART NUMBER	QTY. ASSY.	QTY. UNIT	CODE	KARDEX	PURCHASE ORDER
			C1 A,B,C	82050-0004	Capacitor, Electrolytic 15/15/15 µfd 450V	SP	TVL-3778.2	1	1			
			C2	82060-0103	Capacitor, Ceramic .01 µfd 600V	CRL	DD6-103	1	1			
			C3	82060-0203	Capacitor, Ceramic .02 µfd 600V	CRL	DD-203	1	1			
			C4	82039-0021	Capacitor, Electrolytic 20/150 WVDC	SP	TVA-1410	1	1			
			C6	82039-0081	Capacitor, Electrolytic 80/150 WVDC	SA	MT-1580	1	1			
			C7	82059-0037	Capacitor, Electrolytic 20/25V	AR	[illegible] PTT-81	1	1			
			J1	80100-0146	Connector, Receptacle Output	AMP	126-218	1	1			
			P1	80100-0214	Connector, Plug Input	AMP	126-216	1	1			
			P2	80100-0108	Connector, Plug Power	AMP	17-20090-1	1	1			

* R.S. - RECOMMENDED AS CUSTOMER SPARES

DEPARTMENT ISSUED BY ISSUE DATE

LING ELECTRONICS A division of LING-TEMCO-VOUGHT, INC

ENGINEERING PARTS LIST

DATE 12-4-62 PAGE 2 MANUAL
REV. — CONT'D ON 4 REQUISITION NO.

MODEL OR ASSY.	SERIAL NO.	SHOP ORDER	PON	Q.T.Y.	ACCOUNT NO.	M-DAY	DATE
PA-2							

REV.	ITEM	*R.S.	SYMBOL DESIG.	STOCK DWG NUMBER	DESCRIPTION	MFG CODE	MANUFACTURER PART NUMBER	QTY. ASSY.	QTY. UNIT	CODE	KARDEX	PUR. REQ. ORDER
			R1	82230-0393J	Resistor 39K 1/2W 5%	O AB		1	1			
			R2	82230-0222J	Resistor 2.2K 1/2W 5%	O AB		1	1			
			R3	82233-2213F	Resistor 221K 1/2W 1%	ERC IRC		1	2			
			R4	82230-0563J	Resistor 56K 1W 5%	O AB		1	1			
			R5	82230-0474J	Resistor 470K 1/2W 5%	O AB		1	1			
			R6	82230-0471J	Resistor 470 ohm 1/2W 5%	O AB		1	1			
			R7		Resistor 221K 1/2W 1%	ERC IRC		1	-			
			R8	82230-0152J	Resistor 1.5K 1/2W 5%	O AB		1	1			
			R10	82230-0562J	Resistor 5.6K 1/2W 5%	O AB		1	1			
			R11	82230-0102J	Resistor 1K 1/2W 5%	O AB		1	2			
			R12	82230-0103J	Resistor 10K 2W 5%	O		1	1			

*R.S. - RECOMMENDED AS CUSTOMER SPARES

DEPARTMENT | ISSUED BY | ISSUE DATE

LING ELECTRONICS A division of LING-TEMCO-VOUGHT, INC.

ENGINEERING PARTS LIST

DATE 8-30-65 PAGE 1 MANUAL

REV. A CONT'D ON 5 REQUISITION NO.

MODEL OR ASSY.	SERIAL NO.	SHOP ORDER	PON	QTY.	ACCOUNT NO.	M-DAY
PA-2						

			SYMBOL DESIG.	STOCK DWG NUMBER	DESCRIPTION	MFG CODE	MANUFACTURER PART NUMBER	QTY. ASSY.	QTY. UNIT	CODE	KARDEX	
			R13	82231-0102J	Resistor 1K 1W 5%	O AB		1	1			
			R14	82254-1203	Potentiometer 20K	BOU	3067S-1-203	1	1			
			R15		Resistor 1K 1/2W 5%	O		1	-			

THIS IS RECOMMENDED AS CUSTOMER SPARE

DEPARTMENT | ISSUED BY | ISSUE DATE

LING ELECTRONICS A division of LING-TEMCO-VOUGHT, INC.

ENGINEERING PARTS LIST

DATE 3-30-65 PAGE 5 MANUAL
REV. A CONT'D ON REQUISITION NO.

NAME OF ASSY.	SERIAL NO.	SHOP ORDER	PON	QTY.	ACCOUNT NO.	M-DAY	DATE
PA-2							

REV.	INC.	*R.S.	SYMBOL DESIG.	STOCK/DWG NUMBER	DESCRIPTION	MFG CODE	MANUFACTURER PART NUMBER	QTY. ASSY.	QTY. UNIT	CODE	KARDEX	PURCHASE ORDER
			T1	82305-0010	Transformer, Input 500/36K	HERMETIC	S1-2220	1	1			
			V1	82130-0074	Tube, Type 7025		7025	1	1			
			V2	82130-0041	Tube, Type 12AU7	RCA	12AU7	1	1			
A			XV1 & XV2	82280-0008	Socket, Tube 9P Shield Base		TS103P01	2	2			
				82270-0005	Shield, Tube	CJ	TS103U02	2	2			
				82170-0004	Heat Dissipating Insert	BIRT	75014-2	2	2			

*R.S. - RECOMMENDED AS CUSTOMER SPARES

DEPARTMENT	ISSUED BY	ISSUE DATE

LING ELECTRONICS (Division of LING-TEMCO-VOUGHT, INC.)

ENGINEERING PARTS LIST

DATE 5/16/6 PAGE 1 MANUAL
REV. CONT'D ON 2 REQUISITION NO.

MODEL OR ASSY.	SERIAL NO.	SHOP ORDER	PON	QTY.	ACCOUNT NO.	M-DAY	DATE
PA-1A	141		43137				

REV.	ITEM	*R.S.	SYMBOL DESIG.	STOCK/DWG NUMBER	DESCRIPTION	MFG CODE	MANUFACTURER PART NUMBER	QTY. ASSY.	QTY. UNIT	CODE	KARDEX	PURCHASE ORDER
				34297	Schematic			-	-			
	1			31272	Chassis Complete			1	1			
	2			42033	Chassis			-	-			
				45212	Assembly and Wiring			-	-			

*R.S. - RECOMMENDED AS CUSTOMER SPARES

DEPARTMENT | ISSUED BY | ISSUE DATE

LING ELECTRONICS A division of LING-TEMCO-VOUGHT, INC

ENGINEERING PARTS LIST

DATE 5/16/66 PAGE 2 MANUAL
REV. CONT'D ON 3 REQUISITION NO.

MODEL OR ASSY.	SERIAL NO.	SHOP ORDER	PON	QTY.	ACCOUNT NO.	M-DAY	DATE
PA-1A							

REV.	ITEM	*R.S.	SYMBOL DESIG.	STOCK/DWG NUMBER	DESCRIPTION	MFG CODE	MANUFACTURER PART NUMBER	QTY. ASSY.	QTY. UNIT	CODE	KARDEX	PURCHA ORDE
	3		C1 A, B, C	82050-0004	Capacitor, Electrolytic Twist Lock 15/15/15/450	SA	PLT-131	1	1			
	4		C2	82060-0503	Capacitor, Ceramic .05 µf 600V	CRL	DD 503	1	1			
	5		C3	82060-0103	Capacitor, Ceramic .01 µf 600V	CRL	DD 1032	1	1			
	6		C4	82028-1501	Capacitor, Electrolytic 500 µf 3V	IEI	FPA-500-A-0	1	1			
	7		C5	82063-0200	Capacitor, Electrolytic 20 µf 250V	SP	TVA 1508	1	1			
	8		C6	82027-0101K	Capacitor, Ceramic 100 pf 1000V	CRL	DD 101	1	1			
	9		J1	80100-0146	Connector, Female	AMP	126-218	1	1			
	10		P1	80100-0214	Connector, Male	AMP	126-216	1	1			
	11		P2	80100-0108	Connector, Male	AMP	17-20090-1	1	1			

*R.S. - RECOMMENDED AS CUSTOMER SPARES

LING ELECTRONICS A division of LING-TEMCO-VOUGHT, INC

DEPARTMENT	ISSUED BY	ISSUE DATE

ENGINEERING PARTS LIST

DATE 5/1/66 PAGE 3 MANUAL
REV. CONT'D ON 4 REQUISITION NO.

MODEL OR ASSY.	SERIAL NO.	SHOP ORDER	PON	QTY.	ACCOUNT NO.	M-DAY	DATE
PA-1A							

REV.	ITEM NO.	*R.S.	SYMBOL DESIG.	STOCK DWG NUMBER	DESCRIPTION	MFG CODE	MANUFACTURER PART NUMBER	QTY. ASSY.	QTY. UNIT	CODE	KARDEX	PURCHASE ORDER
	12		R1	82230-0203J	Resistor, Carbon 20K 1/2W 5%	0		1	1			
	13		R2	82230-0105J	Resistor, Carbon 1 meg. 1/2W 5%	0		1	1			
	14		R3	82230-0562J	Resistor, Carbon 5.6K 1/2W 5%	0		1	1			
	15		R4	82233-4753F	Resistor, Carbon Film 475K 1/2W 1%			1	1			
	16		R5	82230-0105J	Resistor, Carbon 1 meg. 1/2W 5%	0		1	1			
	17		R6	82230-0103J	Resistor, Carbon 10K 1/2W 5%	0		1	1			
	18		R7	82234-0134F	Resistor, Carbon Film 130K 1W 1%			1	1			
	19		R8	82230-0512J	Resistor, Carbon 5.1K 1/2W 5%	0		1	1			
	20		R9	82230-0821J	Resistor, Carbon 820Ω 1/2W 5%	0		1	1			
	21		R10	82230-0514J	Resistor, Carbon 510K 1/2W 5%	0		1	1			
	22		R11	82230-0562J	Resistor, Carbon 5.6K 1/2W 5%	0		1	1			
	23		R12	82230-04P7J	Resistor, Carbon 4.7Ω 1/2W 5%	0		1	1			

*R.S. - RECOMMENDED AS CUSTOMER SPARES

DEPARTMENT	ISSUED BY	ISSUE DATE

LING ELECTRONICS, A division of LING-TEMCO-VOUGHT, INC.

ENGINEERING PARTS LIST

DATE 5/16/66 PAGE 4 MANUAL
REV. CONT'D ON 5 REQUISITION NO.

MODEL OR ASSY.	SERIAL NO.	SHOP ORDER	PON	QTY.	ACCOUNT NO.	M-DAY	DATE
PA-1A							

REV.	ITEM NO.	*R.S.	SYMBOL DESIG.	STOCK/DWG NUMBER	DESCRIPTION	MFG CODE	MANUFACTURER PART NUMBER	QTY. ASSY.	QTY. UNIT	CODE	KARDEX	PURCHASE ORDER
	24		T1	82305-0009	Transformer 40K : 500 ohm HERMETIC		TO 2332	1	1			
	25		V1	82130-0074	Tube 1 15/16 lg	RCA	7025	1	1			
	26			82280-0008	Tube Socket 9 pin shield base	CJ	TS103P01	1	1			
	27			82270-0005	Tube Shield	CJ	TS103U02	1	1			
	28			82170-0004	Heat Dissipating Insert	BIRT	75014-2	1	1			

*R.S. - RECOMMENDED AS CUSTOMER SPARES

DEPARTMENT ISSUED BY ISSUE DATE

LING ELECTRONICS A Unit of LING-TEMCO-VOUGHT, INC

ENGINEERING PARTS LIST

MODEL OR ASSY.	SERIAL NO.	SHOP ORDER	PON	QTY.	ACCOUNT NO.	M-DAY	DATE
LA-3	141		43137				

	ITEM	*R.S.	SYMBOL DESIG.	STOCK/DWG NUMBER	DESCRIPTION	MFG CODE	MANUFACTURER PART NUMBER	QTY. ASSY	QTY. UNIT	U/M	KARDEX	
				31158	Schematic			-	-			
A	1			31285	Chassis Complete			1	1			
				42609	Assembly and Wiring			-	-			
A	2			42030	Chassis			-	-			
A	3		C1 A,B,C	82050-0004	Capacitor, Electrolytic 15 µfd 450V 3 sec.	SP	TVL-3778.2	1	1			
A	4		C2	82027-0102	Capacitor, Ceramic .001 µfd 1KV	CRL	DD-102	1	1			
A	5		C3	82039-0011	Capacitor, Electrolytic 10 µfd 150V	SP	TVA-1406	1	1			
	6		C4	82039-0041	Capacitor, Electrolytic 40 µfd 150V	SP	TVA-1413	1	1			
	7		C5	82027-0202	Capacitor, Ceramic .002 µfd 1KV	CRL	DD-202	1	1			
A	8		C6	82033-1250	Capacitor 25 µfd 15V	IEI		1	1			

*R.S. - RECOMMENDED AS CUSTOMER SPARES

DEPARTMENT	ISSUED BY	ISSUE DATE	REV

LING ELECTRONICS A division of LING-TEMCO-VOUGHT, INC

ENGINEERING PARTS LIST

DATE [illegible] PAGE [illegible] MANUAL

REV. B CONT'D ON B REQUISITION NO.

MODEL OR ASSY.	SERIAL NO.	SHOP ORDER	PON	QTY	ACCOUNT NO.	M-DAY	DATE
LA-3							

REV.	ITEM NO.	*R.S.	SYMBOL DESIG.	STOCK/DWG NUMBER	DESCRIPTION	MFG CODE	MANUFACTURER PART NUMBER	QTY. ASSY.	QTY. UNIT	CODE	KARDEX	PURCHASE ORDER
A	9		J1	80100-0146	Connector, Output Female	AMP	126-218	1	1			
	10		P1	80100-0214	Connector, Input #1 Male	AMP	126-216	1	2			
			P2		Connector, Input #2 Male	AMP	126-216	1	-			
A	11		P3	80100-0108	Connector, Power - Male	AMP	17-20090-1	1	1			
	12		R1	82230-0823J	Resistor, Composition 82K 1/2W ± 5%	O AB		1	1			
	13		R2	82230-0433J	Resistor, Composition 43K 1/2W ± 5%	O AB		1	1			
A	14		R3	82233-2213F	Resistor, Precision 221K 1/2W ± 1%			1	2			
	15		R4	82230-0222J	Resistor, Composition 2.2K 1/2W ± 5%	O AB		1	1			
	16		R5	82230-0563J	Resistor, Composition 56K 1/2W ± 5%	O AB		1	1			
	17		R6	82254-1203	Potentiometer, Trimpot 20,000 ohm	BOU	3067-S-1-203	1	1			
	18		R7	82230-0102J	Resistor, Composition 1K 1/2W 5%	O AB		1	1			

*R.S. RECOMMENDED AS CUSTOMER SPARE

DEPARTMENT | ISSUED BY | ISSUE DATE

LING ELECTRONICS A [illegible] LING-TEMCO-VOUGHT INC

ENGINEERING PARTS LIST

DATE 6-30-65 PAGE 3 MANUAL
REV. A CONT'D ON 4 REQUISITION NO.

MODEL OR ASSY: LA 3 | SERIAL NO. | HOP ORDER | PON | QTY. | ACCOUNT NO. | MFAY

REV.	ITEM NO.	*R.S.	SYMBOL DESIG.	STOCK/DWG NUMBER	DESCRIPTION	MFR CODE	MANUFACTURER'S PART NUMBER	QTY. ASSY.	QTY. UNIT	CODE	KARDEX	ORDER
	19		R8	82230-0474J	Resistor, Composition 470K 1/2W 5%	O AB		1	1			
A			R9		Resistor, Precision 220K 1/2W ± 1%		RN65	1	-			
	20		R10	82230-0332J	Resistor, Composition 3.3K 1/2W 5%	O AB		1	1			
	21		R11	82230-0152J	Resistor, Composition 1.5K 1/2W 5%	O AB		1	1			
	22		R12	82231-0681J	Resistor, Composition 680 ohm 1W 5%	O AB		1	1			
	23		R13	82232-0123J	Resistor, Composition 12K 2W 5%	O AB		1	2			
			R14	82232-0123J	Resistor, Composition 12K 2W 5%	O AB		1	-			
A	24		T1	82305-0011	Transformer, Input	T	G-5	1	1			
	25		V1	82130-0074	Tube, Type 7025	GE	7025	1	1			
	26		V2	82130-0059	Tube, Type 5687	RCA	5687	1	1			

*R.S. - RECOMMENDED AS CUSTOMER SPARES

DEPARTMENT | ISSUED BY

LING ELECTRONICS — LING-TEMCO-VOUGHT INC

ENGINEERING PARTS LIST

CONT'D ON —

ASSY.	SERIAL NO.	SHOP ORDER	PON	QTY.	ACCOUNT NO.	
LA-3						

ITEM NO.	R. S.	SYMBOL DESIG.	STOCK/DWG NUMBER	DESCRIPTION	MFG CODE	MANUFACTURER PART NUMBER	QTY. ASSY.	QTY. UNIT		
27			82280-0008	Socket, Tube 9 pin shield base		TS103P01	2	2		
28			82270-0005	Shield, Tube		TS103U01	2	2		
29			82170-0004	Insert, Heat Dissipating	BIRT	75014-2	2	2		

LING ELECTRONICS

ENGINEERING PARTS LIST

DATE [illegible] PAGE 1 MANUAL

REV. A CONT'D ON 2 REQUISITION NO.

MODEL OR ASSY.	SERIAL NO.	SHOP ORDER	PON	QTY.	ACCOUNT NO.	M-DAY	DATE
MR-40B Meter Range Selector	231		43137				

REV.	ITEM	*R.S.	SYMBOL DESIG.	STOCK/DWG NUMBER	DESCRIPTION	MFG CODE	MANUFACTURER PART NUMBER	QTY. ASSY.	QTY. UNIT	CODE	KARDEX	PURCHASE ORDER
				33387	Schematic			-	-			
				42884	Component Assembly, L.H.			-	-			
				42885	Component Assembly, R.H.			-	-			
				42883	Component Assembly, P.C. Card			-	-			
				44368	Connector Assembly			-	-			
				43740	Connector Jumpwires			-	-			
				44370	Silkscreen, Front Panel			-	-			
				42189	Silkscreen, Frame			-	-			

*R.S. - RECOMMENDED AS CUSTOMER SPARES

DEPARTMENT	ISSUED BY	ISSUE DATE

LING ELECTRONICS A division of LING-TEMCO-VOUGHT, INC

ENGINEERING PARTS LIST

DATE _____ PAGE _____ MANUAL _____

REV. _____ CONT'D ON _____ REQUISITION NO. _____

MODEL OR ASSY.	SERIAL NO.	SHOP ORDER	PON	QTY.	ACCOUNT NO.	M-DAY	DATE
MR-40B							

REV.	ITEM	*R.S.	SYMBOL DESIG.	STOCK/DWG NUMBER	DESCRIPTION	MFG CODE	MANUFACTURER PART NUMBER	QTY. ASSY.	QTY. UNIT	CODE	KARDEX	PURCHASE ORDER
				44369	Assembly Meter Range Switch			(1)	(1)			
			-	42044	Front Panel			1	1			
				42045	Frame			1	1			
				20929	Bracket - Mounting P.C.Card			1	1			
				31200	Chassis - Relay			1	1			
				20957	Bracket - Relay Mounting			1	1			
				21454	Angle - Switch Mounting			2	2			
				PS 10903	Switch Assembly 3 Position			-	-			
				31201	Cross Bar			1	1			
				42289	Bracket Connector Mounting			1	1			
				5784	P.C. Card			2	2			
				20548	Knob			40	40			

*R.S. - RECOMMENDED AS CUSTOMER SPARES

DEPARTMENT | ISSUED BY | ISSUE DATE

LING ELECTRONICS A Division of LING-TEMCO-VOUGHT, INC

ENGINEERING PARTS LIST

DATE 1-24-65 PAGE 3 MANUAL
REV. A CONT'D ON 4 REQUISITION NO.

MODEL OR ASSY.	SERIAL NO.	SHOP ORDER	PON	QTY.	ACCOUNT NO.	M-DAY	DATE
MR-40B							

REV.	ITEM NO.	*R.S.	SYMBOL DESIG.	STOCK/DWG NUMBER	DESCRIPTION	MFG CODE	MANUFACTURER PART NUMBER	QTY. ASSY.	QTY. UNIT	C. CODE	KARDEX	PURCHASE ORDER
				82136-0001	Handle	GAXY	28-15	2	2			
A			C1	82029-1182	Capacitor, Electrolytic 1800 mfd 3V	IEI	FPC-2K-B	40	40			
A			C2	82029-0083	Capacitor, Electrolytic 8000 mfd 3V	MEC	BST40-80-3P	~~40~~	~~40~~		MEC Capacitor u (MFSD-40, S/N 1	
A			C2	82029-1802	Capacitor, Electrolytic 8000 mfd 3V	IEI	FPC-8.8K-A	40	40			
			CR1	PS-10239	Diode, Zener			40	40			
A			CR2	82111-0005	Diode	TI	TI56	1	1			
			J1 J3	80099-0058	Connector, 104 Pin	AMP	220-700-01	2	2			
A				80099-0056	Contacts, female	AMP	220-811	160	160			
				80099-0098	Hardware	AMP	220-706	2	2			
			J2	80099-0059	Connector, 104 Pin	AMP	220-699-01	1	1			

*R.S. - RECOMMENDED AS CUSTOMER SPARES

DEPARTMENT | ISSUED BY | ISSUE DATE

LING ELECTRONICS A division of LING-TEMCO-VOUGHT INC

ENGINEERING PARTS LIST

DATE 7-15-65 PAGE 4 MANUAL
REV. A CONT'D ON 5 REQUISITION NO.

MODEL OR ASSY.	SERIAL NO.	SHOP ORDER	PON	QTY.	ACCOUNT NO.	M-DAY	DATE
MR-40B							

REV.	ITEM	*R. S.	SYMBOL DESIG.	STOCK/DWG NUMBER	DESCRIPTION	MFG CODE	MANUFACTURER PART NUMBER	QTY. ASSY.	QTY. UNIT	CODE	KARDEX	PURCHASE ORDER
A				80099-0057	Contacts - Male	AMP	220-810	80	80			
				80099-0097	Hardware	AMP	220-546	1	1			
A			J4	80100-0214	Connector - Male	AMP	126-216	1	1			
			K1	82292-0018	Relay-51 Form C-48VDC Coil Gold Plated Contacts	AUTO	RV-97	1	1			
			P1 thru P4	80100-0224	Connector 23 Contacts	PRECISION	6040-23S	4	4			
			R1	82233-6810F	Resistor 681 ohm 1/2W 1%		RN-20X	40	80			
			R2		Resistor 681 ohm 1/2W 1%		RN-20X	40	-			
			R4	82233-1690F	Resistor 169 ohm 1/2W 1%		RN-20X	40	40			

* RECOMMENDED AS CUSTOMER SPARES

DEPARTMENT | ISSUED BY | ISSUE DATE

LING ELECTRONICS A Division of LING-TEMCO-VOUGHT, INC.

ENGINEERING PARTS LIST

DATE [illegible] PAGE 5 MANUAL ____

REV. ____ CONT'D ON ____ REQUISITION NO. ____

MODEL OR ASSY.	SERIAL NO.	SHOP ORDER	PON	QTY.	ACCOUNT NO.	M-DAY	DATE
MR-40B							

REV.	ITEM	*R.S.	SYMBOL DESIG.	STOCK/DWG NUMBER	DESCRIPTION	MFG CODE	MANUFACTURER PART NUMBER	QTY. ASSY.	QTY. UNIT	CODE	KARDEX	PURCHASE REQ.
			R5	82233-5360F	Resistor 536 ohm 1/2W 1%		RN-20X	40	40			
			S1	PS 10903	Switch Assembly (3) Position			1	1			

*R.S. - RECOMMENDED AS CUSTOMER SPARES

DEPARTMENT	ISSUED BY	ISSUE DATE

LING ELECTRONICS A division of LING-TEMCO-VOUGHT INC

ENGINEERING PARTS LIST

DATE [illegible] PAGE 1 MANUAL
REV. [illegible] CONT'D ON 2 REQUISITION NO.

MODEL OR ASSY.	SERIAL NO.	SHOP ORDER	PON	QTY.	ACCOUNT NO.	M-DAY	DATE
CM-40B Mode Selector	228		43137				

REV.	ITEM	*R.S.	SYMBOL DESIG.	STOCK/DWG NUMBER	DESCRIPTION	MFG CODE	MANUFACTURER PART NUMBER	QTY. ASSY.	QTY. UNIT	CODE	KARDEX	PURCHASE ORDER
				32782	Schematic	-		-	-			
					Silkscreen - Front Panel			-	-			
				42368	Silkscreen - Frame			-	-			
				32785	Wiring #1 Mode Selector			-	-			
				32786	Wiring #2 Mode Selector			-	-			
				32787	Wiring #3 Mode Selector			-	-			
				32788	Wiring #4 Mode Selector			-	-			
				43908	Mode Selector Switch Assy.			(1)	(1)			
				PS 10901	Switch Bank Assembly (2) Position			1	1			
				42044	Front Panel			1	1			
				42053	Frame			1	1			
				22553	Connector Assembly			(1)	(20)			

*R.S. - RECOMMENDED AS CUSTOMER SPARES

DEPARTMENT | ISSUED BY | ISSUE DATE

LING ELECTRONICS A DIVISION OF LING-TEMCO-VOUGHT INC

ENGINEERING PARTS LIST

DATE [illegible] PAGE 2 MANUAL

REV. H CONT'D ON 3 REQUISITION NO.

MODEL OR ASSY.	SERIAL NO.	SHOP ORDER	PON	QTY.	ACCOUNT NO.	M-DAY	DAT
CM-40B Mode Selector							

REV.	ITEM	*R.S.	SYMBOL DESIG.	STOCK/DWG NUMBER	DESCRIPTION	MFG CODE	MANUFACTURER PART NUMBER	QTY. ASSY.	QTY. UNIT	CODE	KARDEX	PURCH ORDE
E				22553-3	Plug Strip Male Make from AMP #221-1160			1	20			
F				80099-0056	Contact Female	AMP	220-P02	8	160			
				80099-0089	Guide Pins	AMP	221-535	2	40			
F				80099-0090	Plug Strip Male	AMP	221-1160	-	-			
				44367	Interconnecting Cable			1	1			
				82136-0001	Handle	GAXY	28-15	2	2			
				85242-2214	Snap Bushing	HEY	SB-437-5	20	20			
B				21454	Angle Switch Mounting			2	2			

*R.S. - RECOMMENDED AS CUSTOMER SPARES

DEPARTMENT	ISSUED BY	ISSUE DATE

LING ELECTRONICS A division of LING-TEMCO-VOUGHT, INC.

ENGINEERING PARTS LIST

DATE 3-24-66 PAGE 3 MANUAL
REV. A CONT'D ON 4 REQUISITION NO.

MODEL OR ASSY.	SERIAL NO.	SHOP ORDER	PON	QTY.	ACCOUNT NO.	M-DAY	DAT
CM-40B Mode Selector							

REV.	ITEM NO.	*R.S.	SYMBOL DESIG.	STOCK/DWG NUMBER	DESCRIPTION	MFG CODE	MANUFACTURER PART NUMBER	QTY. ASSY.	QTY. UNIT	CODE	KARDEX	PURCH ORD
			J1	80099-0059	Connector, 104 Pin	AMP	220-2N104	1	1			
				80099-0057	Contacts - Male	AMP	220-P02	80	80			
			J2	80100-0152	Connector, 7 Pin	AMP	126-197	1	1			
			J3	80100-0142	Connector, 24 Pin	AMP	26-4401-24P w/Shell	1	1			
			J4	80100-0143	Connector, 24 Pin	AMP	26-4402-24P w/Shell	1	1			
			J5	80099-0058	Connector, 104 Pin	AMP	220-1N104	1	2			
				80099-0056	Contacts - Female	AMP	220-S02	80	160			
			J6		Connector, 104 Pin	AMP	220-1N104	1	-			
					Contacts - Female	AMP	220-S02	80	-			

*R.S. - RECOMMENDED AS CUSTOMER SPARES

DEPARTMENT | ISSUED BY | ISSUE DATE

LING ELECTRONICS A DIVISION OF LING-TEMCO-VOUGHT INC

ENGINEERING PARTS LIST

DATE 2-27-61 PAGE 4 MANUAL
REV. 9 CONT'D ON — REQUISITION NO.

MODEL OR ASSY.	SERIAL NO.	SHOP ORDER	PON	QTY.	ACCOUNT NO.	M-DAY	DATE
CM-40B Mode Selector							

REV.	ITEM	*R.S.	SYMBOL DESIG.	STOCK/DWG NUMBER	DESCRIPTION	MFG CODE	MANUFACTURER PART NUMBER	QTY. ASSY.	QTY. UNIT	CODE	KARDEX	PURCHASE ORDER
			J7-J26	22553-3	Connector Assembly (See Page 2)			-	-			
				80112-0102	Terminal Strip	CJ	51	8	8			
			R1-R40	82230-0511J	Resistor, Composition 510 ohm 1/2W 5%			40	40			
			R41-R80	82230-07P5J	Resistor, Composition 7.5 ohm 1/2W 5%			40	40			
			R81-R120	82230-0152J	Resistor, Composition 1.5K 1/2W 5%			40	40			

*R.S. - RECOMMENDED AS CUSTOMER SPARES

LING ELECTRONICS A Division of LING-TEMCO-VOUGHT INC

DEPARTMENT | ISSUED BY | ISSUE DATE

ENGINEERING PARTS LIST

DATE _____ PAGE _____ MANUAL _____

REV. _____ CONT'D ON _____ REQUISITION NO. _____

MODEL OR ASSY.	SERIAL NO.	SHOP ORDER	PON	QTY.	ACCOUNT NO.	M-DAY	DATE
CP-10B	141		43137				

REV.	ITEM NO.	*R.S.	SYMBOL DESIG.	STOCK/DWG NUMBER	DESCRIPTION	MFG CODE	MANUFACTURER PART NUMBER	QTY. ASSY.	QTY. UNIT	CODE	KARDEX	PURCHASE ORDER
				44819	Schematic			-	-			
				42034	Chassis			-	-			
				42035	Front Panel			-	-			
				32043	Meter Scale			-	-			

*R.S. - RECOMMENDED AS CUSTOMER FURNISHED

DEPARTMENT | ISSUED BY | ISSUE DATE

LING ELECTRONICS A division of LING-TEMCO-VOUGHT INC

ENGINEERING PARTS LIST

DATE [illegible] PAGE 2 MANUAL
REV. A CONT'D ON 3 REQUISITION NO.

MODEL OR ASSY.	SERIAL NO.	SHOP ORDER	PON	QTY.	ACCOUNT NO.	M-DAY	DATE
CP-10B							

REV.	ITEM NO.	*R.S.	SYMBOL DESIG.	STOCK/DWG NUMBER	DESCRIPTION	MFG CODE	MANUFACTURER PART NUMBER	QTY. ASSY.	QTY. UNIT	CODE	KARDEX	PURCHASE ORDER
				60054	Assembly & Wiring Control Panel			(1)	(1)			
	1			44765	Chassis Complete			1	1			
	2			44764	Front Panel Complete			1	1			
	3				Amplifier (See own EPL)		LA-3	1	1			
	4				Amplifier (See own EPL)		PA-1	1	1			
	5			31728	Cover			1	1			
	6			20548	Knob			4	4			
				82136-0003	Handle	GAXY	28-17	2	2			
				80115-0004	Knob	RAY	175-3-2	1	1			
				80099-0061	Cable Clamp Shell	CAN	DE24657	2	2			

*R.S. - RECOMMENDED AS CUSTOMER SPARES

DEPARTMENT | ISSUED BY | ISSUE DATE

LING ELECTRONICS A division of LING-TEMCO-VOUGHT, INC

ENGINEERING PARTS LIST

DATE [illegible] PAGE 3 MANUAL
REV. B CONT'D ON 4 REQUISITION NO.

MODEL OR ASSY.	SERIAL NO.	SHOP ORDER	PON	QTY.	ACCOUNT NO.	M-DAY	DATE
CP-10B							

REV.	ITEM NO.	*R.S.	SYMBOL DESIG.	STOCK/DWG NUMBER	DESCRIPTION	MFG CODE	MANUFACTURER PART NUMBER	QTY. ASSY.	QTY. UNIT	CODE	KARDEX	PURCHASE ORDER
			CR1	82113-0023	Diode, Zener 10V ± 5% 250MW		1N714A	1	1			
			CR2	82111-0005	Diode	TI	TI56	1	2			
			CR3		Diode	TI	TI56	1	-			
			CR4	82111-0011	Diode		1N270	1	1			
			J1-J4 J9	80100-0082	Connector, receptacle female 6 contacts	CAN	RWK-6-31SL	5	5			
			J5	80100-0118	Connector, plug female 5 contacts	AMP	126-223	1	1			
			J6,J7	80100-0120	Connector, receptacle female 9 contacts	AMP	17-10090-1	2	2			
			J8		Not used							

*R.S. - RECOMMENDED AS CUSTOMER SPARES

DEPARTMENT	ISSUED BY	ISSUE DATE

LING ELECTRONICS A division of LING-TEMCO-VOUGHT, INC

ENGINEERING PARTS LIST

DATE [illegible] PAGE [illegible] MANUAL
REV. A CONT'D ON [illegible] REQUISITION NO.

MODEL OR ASSY.	SERIAL NO.	SHOP ORDER	PON	QTY.	ACCOUNT NO.	M-DAY	DATE
CP-10B							

REV.	ITEM	*R.S.	SYMBOL DESIG.	STOCK/DWG NUMBER	DESCRIPTION	MFG CODE	MANUFACTURER PART NUMBER	QTY. ASSY.	QTY. UNIT	CODE	KARDEX	PURCHASE ORDER
			J10		Not used							
			J11,J12	80100-0214	Connector, receptacle male 5 contacts	AMP	126-216	2	2			
			J13	80100-0146	Connector, receptacle female	AMP	126-218	1	1			
			J14	80100-0152	Connector, receptacle	AMP	126-197	1	1			
			M1,M2	82360-0020	Meter Compression, 100 μa meter face per dwg. 32043	AMM	AM-2	2	2			
			R5	PS-11026	Attentuator, Dual 10K, sec. max atten. in full CW position	ALTEC		1	1			
					600 ohm sec. max atten. in full CW position							
			R6	82230-0243J	Resistor, Composition 24K 1/2W 5%			1	1			

*R.S. - RECOMMENDED AS CUSTOMER SPARES

LING ELECTRONICS A division of LING-TEMCO-VOUGHT, INC

DEPARTMENT	ISSUED BY	ISSUE DATE

ENGINEERING PARTS LIST

DATE [illegible] PAGE 3 MANUAL

REV. - CONT'D ON 6 REQUISITION NO.

MODEL OR ASSY.	SERIAL NO.	SHOP ORDER	PON	QTY.	ACCOUNT NO.	M-DAY	DATE
CP-10B							

REV.	ITEM	*R.S.	SYMBOL DESIG.	STOCK/DWG NUMBER	DESCRIPTION	MFG CODE	MANUFACTURER PART NUMBER	QTY. ASSY.	QTY. UNIT	CODE	KARDEX	PURCH. ORD.
			R7	82230-0475J	Resistor, Composition 4.7 meg 1/2W 5%			1	1			
			R8	82237-0203J	Resistor, Wirewound 20K 10W 5%			1	1			
			R9	82230-0301J	Resistor, Composition 300 ohm 1/2W 5%			1	1			
			R10	82252-0252K	Potentiometer 2.5K 1/2W 5%		CLU2521	1	1			
			R11	82230-0272J	Resistor, Composition 2.7K 1/2W 5%			1	1			
			R12	82230-0752J	Resistor, Composition 7.5K 1/2W 5%			1	1			
			R13	82230-0683J	Resistor, Composition 68K 1/2W 5%			1	1			
			R14	82230-0621J	Resistor, Composition 620 ohm 1/2W 5%			1	1			
			R15	82230-0154J	Resistor, Composition 150K 1/2W 5%			1	1			
			R16	82230-0471J	Resistor, Composition 470 ohm 1/2W 5%			1	2			
			R17		Resistor, Composition 470 ohm 1/2W 5%			1	-			
			R18	82230-0183J	Resistor, Composition 18K 1/2W 5%			1	1			

*R.S. - RECOMMENDED AS CUSTOMER SPARES

DEPARTMENT	ISSUED BY	ISSUE DATE

ENGINEERING PARTS LIST

DATE [illegible] PAGE 6 MANUAL

REV. A CONT'D ON — REQUISITION NO.

MODEL OR ASSY.	SERIAL NO.	SHOP ORDER	PON	QTY.	ACCOUNT NO.	M-DAY	DA
CP-10B							

REV.	ITEM	*R.S.	SYMBOL DESIG.	STOCK/DWG NUMBER	DESCRIPTION	MFG CODE	MANUFACTURER PART NUMBER	QTY. ASSY.	QTY. UNIT	CODE	KARDEX	PUR. ORD.
			S1	82285-0157	Switch, Pushbutton 4 pos. SPST each position	OAK	247162-80	1	1			
A			T1	82305-0012	Transformer	T	G59	1	1			
A			TP1 TP6	80112-0128	Terminal Strip	CJ	52A	2	2			
			TP2	80112-0008	Terminal Strip	CJ	54B	1	1			
			TP3	80112-0088	Terminal Strip	CJ	2005	1	1			
			TP4	80112-0076	Terminal Strip	CJ	2010	1	1			
			TP5	80112-0119	Terminal Strip	CJ	2009	1	1			

*R.S. - RECOMMENDED AS CUSTOMER SPARES

DEPARTMENT	ISSUED BY	ISSUE DATE

LING ELECTRONICS A division of LING-TEMCO-VOUGHT, INC.

ENGINEERING PARTS LIST

DATE [illegible] PAGE [illegible] MANUAL
REV. [illegible] CONT'D ON [illegible] REQUISITION NO.

MODEL OR ASSY.	SERIAL NO.	SHOP ORDER	PON	QTY.	ACCOUNT NO.	M-DAY	DAT
APS-10A	145		43137				

REV.	ITEM NO.	*R.S.	SYMBOL DESIG.	STOCK/DWG NUMBER	DESCRIPTION	MFG CODE	MANUFACTURER PART NUMBER	QTY. ASSY.	QTY. UNIT	CODE	KARDEX	FOREIGN ORDER
				31299	Schematic			-	-			
				42295	Silkscreen, Front Panel			-	-			
				42315	Silkscreen, Housing			-	-			
				31832	Assembly and Wiring #1			-	-			
				50026	Assembly and Wiring - Power Supply, APS-10A			-	-			

*R.S. - RECOMMENDED AS CUSTOMER SPARES

DEPARTMENT | ISSUED BY | ISSUE DATE

LING ELECTRONICS A division of LING-TEMCO-VOUGHT INC

ENGINEERING PARTS LIST

DATE [illegible] PAGE [illegible] MANUAL _____
REV. [illegible] CONT'D ON [illegible] REQUISITION NO.

MODEL OR ASSY.	SERIAL NO.	SHOP ORDER	PON	QTY.	ACCOUNT NO.	M-DAY	DATE
APS-10A							

REV.	ITEM NO.	*R.S.	SYMBOL DESIG.	STOCK/DWG NUMBER	DESCRIPTION	MFG CODE	MANUFACTURER PART NUMBER	QTY. ASSY.	QTY. UNIT	CODE	KARDEX	PURCHASE ORDER
				21154	Handle			2	2			
				42204	Chassis			1	1			
				42203	Panel			1	1			
				42308	Housing			1	1			
				31352	Cover			1	1			
				31621	Bracket			1	1			
				31622	Bracket			1	1			

*R.S. - RECOMMENDED AS CUSTOMER SPARES

DEPARTMENT | ISSUED BY | ISSUE DATE

LING ELECTRONICS A division of LING-TEMCO-VOUGHT, INC

ENGINEERING PARTS LIST

DATE 3-7-66 PAGE 2 MANUAL
REV. F CONT'D ON 3 REQUISITION NO.

MODEL OR ASSY.	SERIAL NO.	SHOP ORDER	PON	QTY.	ACCOUNT NO.	M-DAY	DATE
APS-10A							

REV.	ITEM	*R.S.	SYMBOL DESIG.	STOCK/DWG NUMBER	DESCRIPTION	MFG CODE	MANUFACTURER PART NUMBER	QTY. ASSY.	QTY. UNIT	CODE	KARDEX	PURCH. ORDER
				21326	Patch Plate, Housing			1	1			
			PS1	82008-0004	Power Supply, Regulated 250V at 400MA	ACDC	RPM-400-250	1	1			
			PS2	82008-0003	Power Supply, Regulated 250V at 100MA	ACDC	RPM-100-250	1	1			
			PS3	PS-10126	Power Supply 50 VAC C.T. 800 cps	VAL	PS 1130	1	1			
				21352	Guard, Fan			1	1			
			B1	80153-0040	Blower, Muffin Venturi	R		1	1			
			XF1 - XF3	80143-0009	Fuseholder, Indicating 120VAC neon	LI	344125	3	3			
			XF4	80143-0020	Fuseholder, Indicating 16-32V	LI	344024	1	1			
				85147-1406	Nut, swage		SN-832-4	10	10			
			F1	82145-0013	Fuse, Slo-Blo 3A 3AG 125V	LI	313003	1	1			
			F2	82145-0012	Fuse, Slo-Blo 1A 3AG 125V	LI	313001	1	2			

*R.S. - RECOMMENDED AS CUSTOMER SPARES

DEPARTMENT | ISSUED BY | ISSUE DATE

LING ELECTRONICS A division of LING-TEMCO-VOUGHT, INC

ENGINEERING PARTS LIST

DATE 2-7-60 PAGE 2 MANUAL
REV. E CONT'D ON 4 REQUISITION NO.

MODEL OR ASSY.	SERIAL NO.	SHOP ORDER	PON	QTY.	ACCOUNT NO.	M-DAY	DAY
APS-10A							

REV.	ITEM NO.	*R.S.	SYMBOL DESIG.	STOCK/DWG NUMBER	DESCRIPTION	MFG CODE	MANUFACTURER PART NUMBER	QTY. ASSY.	QTY. UNIT	CODE	KARDEX	PURCHASE ORDER
			F3		Fuse - Slo-Blo 1A 3AG 125V	LI	313001	1	-			
			F4	82145-0008	Fuse 3A 3AG 250V	LI	312003	1	1			
A			J1	80100-0152	Connector - Male 7 Pin	AMP	126-197	1	1			
A			J2- J8	80100-0213	Connector - Female 7 Pin	AMP	126-198	1	7			
B			K1	82292-0044	Relay	SIGMA	42RO-12000- G/SIL	1	1			
A			R1	82246-0251K	Resistor - Wirewound 250 ohm 25W	O		1	1			
A			R2 & R3	82236-0030J	Resistor 3 ohm 5W 5%			2	2			
B			R4	82232-0473J	Resistor 47K 2W 5%	O		1	1			
A			TS1	80112-0073	Terminal Strip	CJ	8-170	1	1			
B			XK1	82280-0016	Socket (Octal - Tube) 8 Pin 1½ Mtg. Centers			1	1			
A E			E1-E5	82430-0006	Standoff - Insulated	USECO	1417	5	5			
C			R5	82231-0331J	Resistor, Composition 330 ohm 1W			1	1			

*R.S. - RECOMMENDED AS CUSTOMER SPARES

DEPARTMENT ISSUED BY ISSUE DATE

LING ELECTRONICS A DIVISION OF LING-TEMCO-VOUGHT, INC.

ENGINEERING PARTS LIST

DATE 6-3-70 PAGE 1 MANUAL
REV. CONT'D ON REQUISITION NO.

MODEL OR ASSY.	SERIAL NO.	SHOP ORDER	PON	QTY.	ACCOUNT NO.	M-DAY	DAT
APS-10A							

REV.	ITEM	*R.S.	SYMBOL DESIG.	STOCK/DWG NUMBER	DESCRIPTION	MFG CODE	MANUFACTURER PART NUMBER	QTY. ASSY.	QTY. UNIT	CODE	REMARKS	
			DS1	82186-0039	Lamp Assembly	ELDEMA	CG63R-RCB-NE2H-33K	1	1			
				80997-0033	Clip	ELDEMA	10905-01	1	1			
				82280-0043	Socket	ELDEMA	2M	1	1			
			S1	82285-0158	Thermostat Assembly Manual Reset	TI	Series 20410L	1	1			
					Open @ 150°F + 5°F, Small Oval flange, Top mounting							
					Screw Term (Flat) load: 5 amp Resistive							
				85262-1410	Spacer Nylon 3/8 O.D. X Thd. # 8-32 5/8 Lg.			2	2			
			CR1	82110-0026	Diode		1N2071	1	1			

*R.S. - RECOMMENDED AS CUSTOMER SPARES

DEPARTMENT	ISSUED BY	ISSUE DATE

LING ELECTRONICS A division of LING-TEMCO-VOUGHT, INC.

ENGINEERING PARTS LIST

DATE [illegible] PAGE [illegible] MANUAL
REV. 6 CONT'D ON 2 REQUISITION NO.

MODEL OR ASSY.	SERIAL NO.	SHOP ORDER	PON	QTY.	ACCOUNT NO.	M-DAY
5LF-40A Low Frequency Equalizer	143		43137			

REV.	ITEM NO.	*R.S.	SYMBOL DESIG.	STOCK/DWG NUMBER.	DESCRIPTION	MFG CODE	MANUFACTURER PART NUMBER	QTY. ASSY.	QTY. UNIT	CODE	KARDEX	[illegible]
				44864	Schematic			-	-			
				45419	Wiring, Chassis			-	-			
				44865	Wiring Diagram Slide Wire Assembly			-	-			
				42339	Front Panel Detail			-	-			
				44758	Rear Panel Detail			-	-			
				31398	Silkscreen, Meter			-	-			
				31399	Silkscreen, Meter			-	-			

*R.S. - RECOMMENDED ALLOSTOMER SPARES

LING ELECTRONICS A division of LING-TEMCO-VOUGHT, INC

EXPERIMENT | [illegible] | [illegible]

ENGINEERING PARTS LIST

DATE 3 10 66 PAGE 2 MANUAL
REV. F CONT'D ON 3 REQUISITION NO.

MODEL OR ASSY.	SERIAL NO.	SHOP ORDER	PON	QTY.	ACCOUNT NO.	M-DAY	DATE
5LF-40A							

REV.	ITEM	*R.S.	SYMBOL DESIG.	STOCK/DWG NUMBER	DESCRIPTION	MFG CODE	MANUFACTURER PART NUMBER	QTY. ASSY.	QTY. UNIT	CODE	KARDEX	PURCHASE ORDER
J				44866	5LF-40A Assembly Consisting of:			(1)	(1)			
				60061	Slide Wire Assembly (See EPL Pages 5 thru 6)			-	-			
				60037	Frame Chassis			1	1			
				42969	Front Panel Complete			1	1			
				44759	Rear Panel Complete			1	1			
				44272	Cover Chassis			1	1			
				33783	Strap Slider Frame Mounting			1	1			
				20548	Knob			15	15			
K				80112-0126	Terminal Strip	CJ	2004	2	2			

*R.S. - RECOMMENDED AS CUSTOMER SPARES

DEPARTMENT	ISSUED BY	ISSUE DATE

ENGINEERING PARTS LIST

DATE 2-2-65 PAGE 3 MANUAL
REV. H CONT'D ON 4 REQUISITION NO.

MODEL OR ASSY.	SERIAL NO.	SHOP ORDER	PON	QTY.	ACCOUNT NO.	M-DAY	DATE
5LF-40A							

REV.	ITEM	*R.S.	SYMBOL DESIG.	STOCK/DWG NUMBER	DESCRIPTION	MFG CODE	MANUFACTURER PART NUMBER	QTY. ASSY.	QTY. UNIT	CODE	KARDEX	PURCHASE ORDER
				82136-0003	Handle	GAXY	28-17	2	2			
				82136-0013	Latch, Panel	STHC	45-10-101-10	5	5			
				82136-0014	Spacer Latch	STHC	45-14-101-15	15	15			
				80115-0021	Knob	RAY	70-3-2G	1	1			
			C1	82028-1182	Capacitor, Electrolytic 1800 mfd 3V	IEI	FPA-2K-A-1	1	6			
			FL1	20610-46	Filter, High Pass			1	1			
			J1	80100-0111	Connector, Plug 15 contacts male	AMP	17-20150-1	1	2			
			J2	80100-0106	Connector, Receptacle 15 contacts female	AMP	17-10150-1	1	1			

*R.S. - RECOMMENDED AS CUSTOMER SPARES

DEPARTMENT | ISSUED BY | ISSUE DATE

LING ELECTRONICS A division of LING-TEMCO-VOUGHT, INC

ENGINEERING PARTS LIST

DATE 12-22-65 PAGE 4 MANUAL
REV. J CONT'D ON 5 REQUISITION NO.

MODEL OR ASSY.	SERIAL NO.	SHOP ORDER	PON	QTY.	ACCOUNT NO.	M-DAY	DATE
5LF-40A							

REV.	ITEM	*R.S.	SYMBOL DESIG.	STOCK/DWG NUMBER	DESCRIPTION	MFG CODE	MANUFACTURER PART NUMBER	QTY. ASSY.	QTY. UNIT	CODE	KARDEX	PURCHASE ORDER
			J3	80100-0107	Connector, Receptacle 9 contacts male	AMP	126-219	1	1			
			J4	80100-0108	Connector, Plug 9 contacts male	AMP	17-20090-1	1	1			
			J5	80100-0109	Connector, Receptacle 14 contacts	AMP	57-40140	1	6			
			J6	80100-0110	Connector, Receptacle 15 contacts female	AMP	17-10250-1	1	1			
			J7		Connector, Receptacle 15 contacts male	AMP	17-20150-1	1	-			
			P1 - P5	80100-0123	Connector, Plug 14 contacts	AMP	57-30140	5	5			
			M1	82362-0001	Meter, Edgewise, D.C. Mill 0-1 MA full scale approx. 20 ohm resistance	S	Type 1522C	1	1			
					silkscreen per dwg. 31398							
			R1	82233-0750F	Resistor, Film 75 ohm 1/2W 1%		RN65	1	1			
			R2	82233-7320F	Resistor, Film 732 ohm 1/2W 1%		RN65	1	12			
			R3		Resistor, Film 732 ohm 1/2W 1%		RN65	1	-			

*R.S. - RECOMMENDED AS CUSTOMER SPARES

DEPARTMENT	ISSUED BY	ISSUE DATE

LING ELECTRONICS A division of LING-TEMCO-VOUGHT, INC

ENGINEERING PARTS LIST

MODEL OR ASSY.	SERIAL NO.	SHOP ORDER	PON	QTY.	ACCOUNT NO.	M-DAY	DA
5LF-40A							

REV.	ITEM	*R.S.	SYMBOL DESIG.	STOCK/DWG NUMBER	DESCRIPTION	MFG. CODE	MANUFACTURER PART NUMBER	QTY. ASSY.	QTY. UNIT	CODE	PART
			R4	82230-0511J	Resistor, Composition 510 ohm ½W 5%			1	6		
			S3	82285-0049	Switch, Rotary 6 pole 2 position	CRL	2019	1	1		
				60061	Slide Wire Assembly Consisting of:			(1)	(5)		
					P.C. Card Assembly (See EPL pg. 7 & 8)			-	-		
				43419	Frame			1	5		
				20543	Slider			1	5		
				20545	Arm			1	5		
				20546	Slide Rod			2	10		
				2540	Drum			2	10		
				20844	Pulley Idler			3	15		
			S1	PS 10900	Switch, 2 position			1	5		
			S2	PS 10902	Switch, 3 position			1	5		

*R.S. - RECOMMENDED AS CUSTOMER SPARES

DEPARTMENT	ISSUED BY	ISSUE DATE

ENGINEERING PARTS LIST

DATE 8-10-66 PAGE 6 MANUAL
REV. R CONT'D ON R1 REQUISITION NO.

MODEL OR ASSY.	SERIAL NO.	SHOP ORDER	PON	QTY.	ACCOUNT NO.	M-DAY	DATE
5LF-40A							

REV.	ITEM NO.	*R.S.	SYMBOL DESIG.	STOCK/DWG NUMBER	DESCRIPTION	MFG CODE	MANUFACTURER PART NUMBER	QTY. ASSY.	QTY. UNIT	CODE	KARDEX	PURCHAS ORDER
			R11	PS-10139	Potentiometer 1 meg 2W			1	5			
				22456	Bracket, Connector Mounting			2	10			
				85201-1216	Spacer 1/4 O.D. x 1" long			4	20			
				85201-1212	Spacer 1/4 O.D. x 3/4" long			5	25			
				82610-0001	Spring			1	5			
			R12	82257-0010	Potentiometer 1K 2W			1	5			
			M2	82362-0002	Meter, Edgewise D.C. Mill 0-1 MA full scale approx. 200 ohm resistance silkscreen per dwg. 31399	S	Type 1522C	1	5			
			J1	80100-0109	Connector 14 contacts	AMP	57-40140	5	-			
				82470-0016	Eyelet	STIM	A2201	3	15			
				83020-0001	Dial Cord	GC	GC-88	2½ ft.	14 ft.			

*R.S. - RECOMMENDED AS CUSTOMER SPARES

DEPARTMENT | ISSUED BY | ISSUE DATE

ENGINEERING PARTS LIST

MODEL OR ASSY.	SERIAL NO.	SHOP ORDER	PON	QTY.	ACCOUNT NO.	M-DAY	DATE
5LF-40A							

A	M	*R.S.	SYMBOL DESIG.	STOCK/DWG NUMBER	DESCRIPTION	MFR CODE	MANUFACTURER PART NUMBER	QTY. ASSY.	QTY. UNIT	E	FAIL	REJ
					P.C. Card, Slide Wire Assemnly Consisting of:			(1)	(5)			
				33256	P.C. Card, Slide Wire			1	5			
			C1		Capacitor, Electrolytic 1800 mfd 3V	IEI	FPA-2K-A-1	1	-			
			C2	82028-1802	Capacitor, Electrolytic 8000 mfd 3V	IEI	FPA-8.5K-A-1	1	5			
			CR1	PS 10239	Diode, Zener 6V ± 1V			1	5			
			R1	82233-1690F	Resistor, Film 169 ohm ½W 1%		RN65	1	5			
			R2	82233-5360F	Resistor, Film 536 ohm ½W 1%		RN65	1	5			
			R3	82230-0511J	Resistor, Composition 510 ohm ½W 5%			1	-			
			R4		Resistor, Film 732 ohm ½W 1%		RN65	1	-			
			R5		Resistor, Film 732 ohm ½W 1%		RN65	1	-			
			R6	82254-0101	Trimpot 100 ohm ½W	BOU	3067P-1-101	1	5			

*R.S. - RECOMMENDED AS CUSTOMER SPARES

DEPARTMENT	ISSUED BY	ISSUE DATE

LING ELECTRONICS ALSO LING-TEMCO-VOUGHT INC

ENGINEERING PARTS LIST

DATE 3-21-66 PAGE 8 MANUAL
REV. G CONT'D ON — REQUISITION NO.

MODEL OR ASSY.	SERIAL NO.	SHOP ORDER	PON	QTY.	ACCOUNT NO.	M-DAY	DATE
5LF-40A							

REV.	ITEM NO.	*R.S.	SYMBOL DESIG.	STOCK/DWG NUMBER	DESCRIPTION	MFG CODE	MANUFACTURER PART NUMBER	QTY. ASSY.	QTY. UNIT	CODE	KARDEX	PURCHAS ORDER
			R7	82230-07P5J	Resistor, Composition 7.5 ohm 1/2W 5%			1	5			
			R8	82230-0510J	Resistor, Composition 51 ohm 1/2W 5%			1	5			

*R.S. - RECOMMENDED AS CUSTOMER SPARES

DEPARTMENT | ISSUED BY | ISSUE DATE

LING ELECTRONICS A division of LING-TEMCO-VOUGHT, INC

ENGINEERING PARTS LIST

DATE 2-7-[illegible] PAGE ____ MANUAL ____

REV. A CONT'D ON 2 REQUISITION NO.

MODEL OR ASSY.	SERIAL NO.	SHOP ORDER	PON	QTY.	ACCOUNT NO.	M-DAY	DATE
GRN-200B	138		43137				

		*R.S.	SYMBOL DESIG.	STOCK DWG NUMBER	DESCRIPTION	MFG CODE	MANUFACTURER PART NUMBER	QTY. ASSY.	QTY. UNIT	CODE	KARDEX	FOR [illegible]
A				50253	Schematic			-	-			
A												
				44775	Chassis			-	-			
				42241	Front Panel			-	-			
A				44960	Assembly			-	-			
A				44961	Wiring #1			-	-			
A				44962	Wiring #2			-	-			
A				44963	Wiring #3			-	-			
A				44964	Wiring #4			-	-			

*R.S. - RECOMMENDED AS CUSTOMER SPARES

DEPARTMENT	ISSUED BY	ISSUE DATE

LING ELECTRONICS Division of LING-TEMCO-VOUGHT INC

ENGINEERING PARTS LIST

DATE _____ PAGE _____ BANDAL _____
REV. _____ CONTROL _____ REQUISITION NO. _____

MODEL OR ASSY.	SERIAL NO.	SHOP ORDER	PON	QTY.	ACCOUNT NO.	M-DAY	DATE
GRN-200B							

[illegible]	ITEM	*R.S.	SYMBOL DESIG.	STOCK/DWG NUMBER	DESCRIPTION	MFG CODE	MANUFACTURER PART NUMBER	QTY. ASSY.	QTY. UNIT	CODE	KARDEX	[illegible]
				22278	Chassis, Noise Source			1	1			
				33801	Shield, Noise Source			1	1			
				31282-1	Bracket, Chassis Support L.H.			1	1			
				31282-2	Bracket, Chassis Support R.H.			1	1			
				21744	Bracket, Relay Mounting			1	1			
				44776	Chassis Complete			1	1			
				44777	Front Panel Complete			1	1			

*R.S. - RECOMMENDED AS CUSTOMER SPARES

DEPARTMENT	ISSUED BY	ISSUE DATE

LING ELECTRONICS Advanced LING-TEMCO-VOUGHT, INC

ENGINEERING PARTS LIST

DATE 2-7-60 PAGE 3 MANUAL
REV. A CONT'D ON 4 REQUISITION NO.

MODEL OR ASSY.	SERIAL NO.	SHOP ORDER	PON	QTY.	ACCOUNT NO.	M-DAY	DATE
GRN-200B							

REV.	ITEM NO.	*R.S.	SYMBOL DESIG.	STOCK/DWG NUMBER	DESCRIPTION	MFG CODE	MANUFACTURER PART NUMBER	QTY. ASSY.	QTY. UNIT	CODE	KARDEX	PURCHASE ORDER
				82136-0001	Handle	GAXY	28-17	2	2			
				80115-0023	Knob	RAY	90-3-2G	1	1			
				85181-1216	Spacer, Hex 1/4 x 6-32 x 1" long			8	8			
				85181-1208	Spacer, Hex 1/4 x 6-32 x 1/2" long			2	2			
				80112-0100	Terminal Strip	CJ	52B	2	2			
A				80112-0103	Terminal Strip	CJ	52	12	12			
A				80112-0008	Terminal Strip	CJ	54B	9	9			
				82430-0006	Tie Point	USEC	1417	4	4			
				82430-0008	Tie Point	USEC	1417A	6	6			
				85241-2416	Grommet 3/8 I.D. x 11/16 O.D.			1	1			
A				80112-0119	Terminal Strip	CJ	2009	2	2			

*R.S. - RECOMMENDED AS CUSTOMER SPARES

DEPARTMENT | ISSUED BY | ISSUE DATE

LING ELECTRONICS A division of LING-TEMCO-VOUGHT, INC

ENGINEERING PARTS LIST

DATE 2-2-66 PAGE 4 MANUAL
REV. A CONT'D ON 5 REQUISITION NO.

MODEL OR ASST.	SERIAL NO.	SHOP ORDER	PON	QTY.	ACCOUNT NO.	M-DAY	DATE
GRN-200B							

REV.	ITEM NO.	*R.S.	SYMBOL DESIG.	STOCK/DWG NUMBER	DESCRIPTION		MFG CODE	MANUFACTURER PART NUMBER	QTY. ASSY.	QTY. UNIT	CODE	KARDEX	PUR. OR.
			C1	83003-0330S	Capacitor, Mica 33 μμf		ARCO	DM-15-330	1	2			
			C2	82060-0203K	Capacitor, Ceramic Disc .02 μf 600V	or	ERIE CRL	ED.02 DD203	1	10			
			C3		Capacitor, Ceramic Disc .02 μf 600V	or	ERIE CRL	ED.02 DD203	1	-			
			C4		Capacitor, Mica 33 μμf		ARCO	DM-15-330	1	-			
			C5		Capacitor, Ceramic Disc .02 μf 600V	or	ERIE CRL	ED.02 DD203	1	-			
			C6		Capacitor, Ceramic Disc .02 μf 600V	or	ERIE CRL	ED.02 DD203	1	-			
			C7	82048-0015	Capacitor .1 mfd 400V		SP	4TM-P10	1	2			
			C8	82060-0473M	Capacitor, Ceramic Disc .047 mfd 500V				1	2			
							PY						
			C10	83003-0102S	Capacitor, Mica .001 μf		ARCO	DM-19-102	1	2			
			C11	82048-0054	Capacitor, Tubular Paper .05 mfd		PY	111-4S5	1	4			
			C12		Capacitor, Tubular Paper .05 mfd 400V		PY	111-4S5	1	-			

*R.S. - RECOMMENDED AS CUSTOMER SPARES

DEPARTMENT	ISSUED BY	ISSUE DATE

LING ELECTRONICS A division of LING-TEMCO-VOUGHT INC

ENGINEERING PARTS LIST

DATE 2-7-60 PAGE 3 MAN. A
REV. A CONT'D ON 5 REQUISITION NO.

MODEL OR ASSY.	SERIAL NO.	SHOP ORDER	PON	QTY.	ACCOUNT NO.	M-DAY	DATE
GRN-200B							

REV.	ITEM NO.	*R.S.	SYMBOL DESIG.	STOCK/DWG NUMBER	DESCRIPTION	MFG CODE	MANUFACTURER PART NUMBER	QTY. ASSY.	QTY. UNIT	CODE	KARDEX	PURCHA ORDER
			C13	82050-0009	Capacitor, Electrolytic 40/40/40/40 450V	SP	TVL4775	1	1			
			C14		Capacitor, Ceramic Disc .02 µf 600V or	ERIE CRL	ED.02 DD203	1	-			
			C15		Capacitor, Ceramic Disc .02 µf 600V or	ERIE CRL	ED.02 DD203	1	-			
			C16		Capacitor, Ceramic Disc .02 µf 600V or	ERIE CRL	ED.02 DD203	1	-			
			C17		Capacitor, Ceramic Disc .02 µf 600V or	ERIE CRL	ED.02 DD203	1	-			
			C18		Capacitor .1 mfd 400V	SP	4TM-P10	1	-			
			C19		Capacitor, Ceramic Disc .02 µf 600V or	ERIE CRL	ED.02 DD203	1	-			
			C20		Capacitor, Ceramic Disc .047 µf 500V			1	-			
			C22		Capacitor, Mica .001 µf	ARCO	DM-19-102	1	-			
			C23		Capacitor, Tubular Paper .05 mfd 400V	PY	111-4S5	1	-			
			C24		Capacitor, Tubular Paper .05 mfd 400V	PY	111-4S5	1	-			

*R.S. - RECOMMENDED AS CUSTOMER SPARES

LING ELECTRONICS A division of LING-TEMCO-VOUGHT, INC

DEPARTMENT | ISSUED BY | ISSUE DATE

ENGINEERING PARTS LIST

DATE _____ PAGE 6 MANUAL _____

REV. — CONT'D ON _____ REQUISITION NO.

MODEL OR ASSY.	SERIAL NO.	SHOP ORDER	PON	QTY.	ACCOUNT NO.	M-DAY	DATE
GRN-200B							

REV.	ITEM	*R.S.	SYMBOL DESIG.	STOCK/DWG NUMBER	DESCRIPTION	MFG CODE	MANUFACTURER PART NUMBER	QTY. ASSY.	QTY. UNIT	CODE	KARDEX	PURCHASE ORDER
			C25	82060-0202	Capacitor, Ceramic .002 µf 500V			1	2			
			C26		Capacitor, Ceramic .002 µf 500V			1	-			
			C27		Capacitor, Ceramic Disc .02 µf 600V or	ERIE CRL	ED.02 DD203	1	-			
			C28	82054-0015	Capacitor, Electrolytic 16 mfd 450V	CD	BR1645	1	2			
			C29		Capacitor, Electrolytic 16 mfd 450V	CD	BR1645	1	-			
			C30	82016-0015K	Capacitor .1 µf 200V 5%	SP	65P10452	1	2			
			C31		Capacitor .1 µf 200V 5%	SP	65P10452	1	-			
			C32	82030-0101	Capacitor 100 µf 6V	AR	PWE-6100	1	1			

*R.S. - RECOMMENDED AS CUSTOMER SPARES

DEPARTMENT	ISSUED BY	ISSUE DATE

LING ELECTRONICS A division of LING-TEMCO-VOUGHT, INC

ENGINEERING PARTS LIST

DATE 2-7-60 PAGE ____ MANUAL ____
REV. A CONT'D ON - REQUISITION NO. ____

MODEL OR ASSY.	SERIAL NO.	SHOP ORDER	PON	QTY.	ACCOUNT NO.	M-DAY	DATE
GRN-200B							

REV.	ITEM	*R.S.	SYMBOL DESIG.	STOCK/DWG NUMBER	DESCRIPTION	MFG CODE	MANUFACTURER PART NUMBER	QTY. ASSY.	QTY. UNIT	CODE	KARDEX	PURCHASE ORDER
A			CR1	82111-0005	Diode	TI	TI56	1	5			
			CR2		Diode	TI	TI56	1	-			
			CR3		Diode	TI	TI56	1	-			
			CR4		Diode	TI	TI56	1	-			
			CR5	82111-0020	Diode	TI	TI60	1	3			
			CR6		Diode	TI	TI60	1	-			
			CR7		Diode	TI	TI56	1	-			
			CR8		Diode	TI	TI60	1	-			
			FL1	22672	Filter, Low Pass 3KC			1	2			
			FL2	22672	Filter, Low Pass 3KC			1	-			

*R.S. - RECOMMENDED AS CUSTOMER SPARES

DEPARTMENT | ISSUED BY | ISSUE DATE

LING ELECTRONICS A division of LING-TEMCO-VOUGHT, INC

ENGINEERING PARTS LIST

DAT 2-1-60 PAGE 2 MANUAL
REV. A CONT'D ON 4 REQUISITION NO.

MODEL OR ASSY.	SERIAL NO.	SHOP ORDER	PON	QTY.	ACCOUNT NO.	M-DAY	DAT
GRN-200B							

REV.	ITEM NO.	*R.S.	SYMBOL DESIG.	STOCK/DWG. NUMBER	DESCRIPTION	MFG CODE	MANUFACTURER PART NUMBER	QTY. ASSY.	QTY. UNIT	CODE	KARDEX	PUR. CA
A			J1	80100-0214	Connector, male	AMP	126-216	1	1			
			J2	80100-0146	Connector, female	AMP	126-218	1	3			
			J3		Connector, female	AMP	126-218	1	-			
			J4	80100-0109	Connector, 14 pin	AMP	57-40140	1	1			
			J5		Connector, female	AMP	126-218	1	-			
			J6	80100-0213	Connector, female	AMP	126-198	1	1			
			K1	82292-0031	Relay 10K ohm coil 2MA	PTB	ML-11-D	1	1			
			Q1	82450-0001	Transistor	TI	TI495	1	1			

*R.S. - RECOMMENDED AS CUSTOMER SPARES

DEPARTMENT | ISSUED BY | ISSUE DATE

LING ELECTRONICS A division of LING-TEMCO-VOUGHT, INC

ENGINEERING PARTS LIST

DATE 2-2-66 PAGE 9 MANUAL
REV. A CONT'D ON 10 REQUISITION NO.

MODEL OR ASSY.	SERIAL NO.	SHOP ORDER	PON	QTY.	ACCOUNT NO.	M-DAY	DATE
GRN-200B							

REV.	ITEM	*R.S.	SYMBOL DESIG.	STOCK/DWG NUMBER	DESCRIPTION	MFG CODE	MANUFACTURER PART NUMBER	QTY. ASSY.	QTY. UNIT	CODE	KARDEX	PURCH. ORDER
			R1	82237-0203J	Resistor, Wirewound 20K 10W	0		1	2			
			R2	82230-0103J	Resistor 10K 1/2W	0		1	6			
			R3		Resistor, Wirewound 20K 10W	0		1	-			
			R4		Resistor 10K 1/2W	0		1	-			
			R5	82230-0104J	Resistor 100K 1/2W			1	5			
			R6	82252-0105M	Potentiometer, Locking 1 meg 2W 20%	AB	CLU 1051	1	2			
			R7	82231-0474J	Resistor 470K 1W			1	4			
			R8	82230-0392J	Resistor 3.9K 1/2W			1	2			
			R9	82230-0105J	Resistor 1 meg 1/2W			1	8			
			R10		Resistor 470K 1W			1	-			
			R11	82230-0562J	Resistor 5.6K 1/2W			1	2			
			R12	82234-4750F	Resistor 475 ohm 1W 1%			1	2			

*R.S. - RECOMMENDED AS CUSTOMER SPARES

DEPARTMENT | ISSUED BY | ISSUE DATE

ENGINEERING PARTS LIST

DATE _____ PAGE 3 MANUAL _____

REV. _____ CONT'D ON _____ REQUISITION NO. _____

MODEL OR ASSY.	SERIAL NO.	SHOP ORDER	PON	QTY.	ACCOUNT NO.	M-DAY	DATE
GRN-200B							

REV.	ITEM NO.	*R.S.	SYMBOL DESIG.	STOCK/DWG NUMBER	DESCRIPTION	MFG CODE	MANUFACTURER PART NUMBER	QTY. ASSY.	QTY. UNIT	CODE	KARDEX	PURCH. ORDER
			R13	82234-5230F	Resistor 523 ohm 1W 1%			1	2			
			R14	82231-0184J	Resistor 180K 1W			1	2			
			R15	82230-0152J	Resistor 1.5K 1/2W			1	2			
			R16	82230-0823J	Resistor 82K 1/2W			1	3			
			R17	82230-0333J	Resistor 33K 1/2W			1	2			
			R18	82231-0223J	Resistor 22K 1W			1	4			
			R19		Resistor 22K 1W			1	-			
			R20	82230-0474J	Resistor 470K 1/2W			1	4			
			R21		Resistor 470K 1/2W			1	-			
			R22	82231-0823J	Resistor 82K 1W			1	4			
			R23		Resistor 82K 1W			1	-			
			R24	82252-0252K	Potentiometer, Locking 2.5K 2W 10%	AB	CLU 2521	1	4			

*R.S. - RECOMMENDED AS CUSTOMER SPARES

DEPARTMENT | ISSUED BY | ISSUE DATE

LING ELECTRONICS A division of LING-TEMCO-VOUGHT, INC

ENGINEERING PARTS LIST

DATE 2-7-6[illegible] PAGE 11 MANUAL
REV. A CONT'D ON 12 REQUISITION NO.

MODEL OR ASSY.	SERIAL NO.	SHOP ORDER	PON	QTY.	ACCOUNT NO.	M.DAY	DATE
GRN-200B							

		*R. S.	SYMBOL DESIG.	STOCK/DWG NUMBER	DESCRIPTION	MFG CODE	MANUFACTURER PART NUMBER	QTY. ASSY.	QTY. UNIT	CODE	KARDEX	[illegible]
A			R25	82230-0242K	Resistor 2.4K 1/2W			1	2			
A			R26	82232-0513J	Resistor 51K 2W			1	4			
			R27		Resistor 51K 2W			1	-			
A												
A												
			R30	82230-0101J	Resistor 100 ohm 1/2W			1	4			
			R31		Resistor 100 ohm 1/2W			1	-			
			R32	82230-0243J	Resistor 24K 1/2W			1	1			
			R33	82252-0103K	Potentiometer, Locking 10K 2W	AB	CLU 1031	1	1			
			R34		Potentiometer, Locking 1 meg 2W 20%	AB	CLU 1051	1	-			
			R35		Resistor 470K 1W			1	-			
			R36		Resistor 3.9K 1/2W			1	-			

*R.S. - RECOMMENDED AS CUSTOMER SPARES

DEPARTMENT | ISSUED BY | ISSUE DATE

LING ELECTRONICS A division of LING-TEMCO-VOUGHT, INC

ENGINEERING PARTS LIST

DATE 11-15-65 PAGE 12 MANUAL

REV. — CONT'D ON — REQUISITION NO.

MODEL OR ASSY.	SERIAL NO.	SHOP ORDER	PON	QTY.	ACCOUNT NO.	M-DAY	DATE
GRN-200B							

REV.	ITEM	*R.S.	SYMBOL DESIG.	STOCK/DWG NUMBER	DESCRIPTION	MFG CODE	MANUFACTURER PART NUMBER	QTY. ASSY.	QTY. UNIT	CODE	KARDEX	PURCHASE ORDER
			R37		Resistor 1 meg 1/2W			1	-			
			R38		Resistor 470K 1W			1	-			
			R39		Resistor 5.6K 1/2W			1	-			
			R40	82334-0130F	Resistor 13 ohm 1W 1%			1	2			
			R41		Resistor 475 ohm 1W 1%			1	-			
			R42		Resistor 180K 1W			1	-			
			R43		Resistor 1.5K 1/2W			1	-			
			R44		Resistor 82K 1/2W			1	-			
			R45		Resistor 33K 1/2W			1	-			
			R46		Resistor 22K 1W			1	-			
			R47		Resistor 22K 1W			1	-			
			R48		Resistor 470K 1/2W			1	-			

*R.S. - RECOMMENDED AS CUSTOMER SPARES

DEPARTMENT | ISSUED BY | ISSUE DATE

ENGINEERING PARTS LIST

DATE 2-7-66 PAGE 13 MANUAL
REV. A CONT'D ON 19 REQUISITION NO.

MODEL OR ASSY.	SERIAL NO.	SHOP ORDER	PON	QTY.	ACCOUNT NO.	M-DAY	DATE
GRN-200B							

REV.	ITEM	*R.S.	SYMBOL DESIG.	STOCK/DWG NUMBER	DESCRIPTION	MFG CODE	MANUFACTURER PART NUMBER	QTY. ASSY.	QTY. UNIT	CODE	KARDEX	PURCHASE ORDER
			R49		Resistor 470K 1/2W			1	-			
			R50		Resistor 82K 1W			1	-			
			R51		Resistor 82K 1W			1	-			
			R52		Potentiometer, Locking 2.5K 2W	AB	CLU 2521	1	-			
			R53		Resistor 2.4K 1/2W			1	-			
			R54		Resistor 51K 2W			1	-			
			R55		Resistor 51K 2W			1	-			
A												
A					51K							
			R58		Resistor 100 ohm 1/2W			1	-			
			R59		Resistor 100 ohm 1/2W			1	-			
			R60	82230-0303J	Resistor 30K 1/2W			1	1			

*R.S. - RECOMMENDED AS CUSTOMER SPARES

DEPARTMENT	ISSUED BY	ISSUE DATE

ENGINEERING PARTS LIST

DATE _____ PAGE 14 MANUAL _____

REV. _____ CONT'D ON _____ REQUISITION NO. _____

MODEL OR ASSY.	SERIAL NO.	SHOP ORDER	PON	QTY.	ACCOUNT NO.	M-DAY	DATE
GRN-200B							

REV.	ITEM	*R.S.	SYMBOL DESIG.	STOCK/DWG NUMBER	DESCRIPTION	MFG CODE	MANUFACTURER PART NUMBER	QTY. ASSY.	QTY. UNIT	CODE	KARDEX	PURCHASE ORDER
			R61	82231-0150J	Resistor 15 ohm 1W			1	1			
			R62	82232-0121J	Resistor 120 ohm 2W			1	1			
			R63	82230-0272J	Resistor 2.7K 2W			1	1			
			R64		Resistor 100K 1/2W			1	-			
			R65	82231-0244J	Resistor 240K 1W			1	2			
			R66		Resistor 100K 1/2W			1	-			
			R67	82230-0242J	Resistor 2.4K 1/2W			1	2			
			R68		Resistor 1 meg 1/2W			1	-			
			R69		Resistor 2.4K 1/2W			1	-			
			R70		Resistor 1 meg 1/2W			1	-			
			R71		Resistor 240K 1W			1	-			
			R72	82230-0682J	Resistor 6.8K 1/2W			1	2			

*R.S. - RECOMMENDED AS CUSTOMER SPARES

DEPARTMENT | ISSUED BY | ISSUE DATE

ENGINEERING PARTS LIST

DATE [illegible] PAGE [illegible] MANUAL
REV. - CONT'D ON [illegible] REQUISITION NO.

MODEL OR ASSY.	SERIAL NO.	SHOP ORDER	PON	QTY.	ACCOUNT NO.	M-DAY	DATE
GRN-200B							

REV.	ITEM NO.	*R.S.	SYMBOL DESIG.	STOCK/DWG NUMBER	DESCRIPTION	MFG CODE	MANUFACTURER PART NUMBER	QTY. ASSY.	QTY. UNIT	CODE	KARDEX	PURCHASE ORDER
			R73		Potentiometer, Locking 2.5K 2W	AB	CLU 2521	1	-			
			R74		Resistor 6.8K 1/2W			1	-			
			R75		Potentiometer, Locking 2.5K 2W	AB	CLU 2521	1	-			
			R76	82232-0221J	Resistor 220 ohm 2W			1	2			
			R77		Resistor 220 ohm 2W			1	-			
			R78		Resistor 1 meg 1/2W			1	-			
			R79		Resistor 1 meg 1/2W			1	-			
			R80 R81	82231-0222J	Resistor 2.2K 1W			2	2			
			R82		Resistor 523 ohm 1W 1%			1	-			
			R83		Resistor 13 ohm 1W 1%			1	-			
			R84	82232-0473J	Resistor 47K 2W			1	1			
			R85		Resistor 82K 1/2W			1	-			

*R.S. - RECOMMENDED AS CUSTOMER SPARES

DEPARTMENT | ISSUED BY | ISSUE DATE

ENGINEERING PARTS LIST

DAT 2-1-66 PAGE ____ MANUAL ____
REV. A CONT'D ON ____ REQUISITION NO. ____

MODEL OR ASSY.	SERIAL NO.	SHOP ORDER	PON	QTY.	ACCOUNT NO.	M-DAY	DATE
GRN-200B							

REV.	ITEM	*R.S.	SYMBOL DESIG.	STOCK/DWG NUMBER	DESCRIPTION	MFG CODE	MANUFACTURER PART NUMBER	QTY. ASSY.	QTY. UNIT	CODE	KARDEX	[illegible]
			R86	82230-0822J	Resistor 8.2K 1/2W			1	1			
			R87	82230-0102J	Resistor 1K 1/2W			1	1			
			R88	82230-0331J	Resistor 330 ohm 1/2W			1	1			
			R89	82230-0124J	Resistor 120K 1/2W			1	1			
			R90	82230-0222J	Resistor 2.2K 1/2W			1	2			
			R91		Resistor 2.2K 1/2W			1	-			
A			R92	82221-0253	Resistor 25K 5W			1	1			
			R93		Resistor 10K 1/2W			1	-			
			R94		Resistor 100K 1/2W			1	-			
			R95		Resistor 100K 1/2W			1	-			
			R96	82230-0332J	Resistor 3.3K 1/2W			1	1			
			R97	82232-0683J	Resistor 68K 2W			1	2			

*R.S. - RECOMMENDED AS CUSTOMER SPARES

DEPARTMENT	ISSUED BY	ISSUE DATE

LING ELECTRONICS A division of LING-TEMCO-VOUGHT, INC

ENGINEERING PARTS LIST

DATE 2-7-66 PAGE ___ MANUAL ___
REV. A CONT'D ON F REQUISITION NO. ___

MODEL OR ASSY.	SERIAL NO.	SHOP ORDER	PON	QTY.	ACCOUNT NO.	M-DAY	DATE
GRN-200B							

REV.	ITEM	*R.S.	SYMBOL DESIG.	STOCK/DWG NUMBER	DESCRIPTION	MFG CODE	MANUFACTURER PART NUMBER	QTY. ASSY.	QTY. UNIT	CODE	KARDEX	PURCH. ORDER
			R98		Resistor 68K 2W			1	-			
			R99		Resistor 10K 1/2W			1	-			
			R100		Resistor 10K 1/2W			1	-			
A			R101	82230-0223J	Resistor 22K 1/2W			1	2			
A			R102		Resistor 22K 1/2W			1	-			
			R103		Resistor 10K 1/2W			1	-			
A			R104	82230-0120J	Resistor 12 ohm 1/2W			1	1			

*R.S. - RECOMMENDED AS CUSTOMER SPARES

DEPARTMENT	ISSUED BY	ISSUE DATE

LING ELECTRONICS A division of LING-TEMCO-VOUGHT, INC

ENGINEERING PARTS LIST

DATE _____ PAGE 8 MANUAL _____
REV. — CONT'D ON _____ REQUISITION NO. _____

MODEL OR ASSY.	SERIAL NO.	SHOP ORDER	PON	QTY.	ACCOUNT NO.	M-DAY	DATE
GRN-200B							

REV.	ITEM NO.	*R.S.	SYMBOL DESIG.	STOCK/DWG. NUMBER	DESCRIPTION	MFG CODE	MANUFACTURER PART NUMBER	QTY. ASSY.	QTY. UNIT	CODE	KARDEX	PURCHASE ORDER
			S1	82285-0193	Switch, Rotary 4 pole 2-6 position 2 sect	CRL	PA-2010	1	1			
			T1	82305-0007	Transformer, Output 8K CT to 4-8-16 ohm	UTC	LS-52	1	2			
			T2		Transformer, Output 8K CT to 4-8-16 ohm	UTC	LS-52	1	-			

*R.S. - RECOMMENDED AS CUSTOMER SPARES

DEPARTMENT	ISSUED BY	ISSUE DATE	RI

LING ELECTRONICS A division of LING-TEMCO-VOUGHT, INC

ENGINEERING PARTS LIST

DATE _____ PAGE _____ MANUAL _____
REV. _____ CONT'D ON _____ REQUISITION NO. _____

MODEL OR ASSY.	SERIAL NO.	SHOP ORDER	PON	QTY.	ACCOUNT NO.	M-DAY	DATE
GRN-200B							

REV.	ITEM	*R.S.	SYMBOL DESIG.	STOCK/DWG NUMBER	DESCRIPTION	MFG CODE	MANUFACTURER PART NUMBER	QTY. ASSY.	QTY. UNIT	CODE	KARDEX	PURCHASE ORDER
			V1 V2	82130-0030	Tube	SY	6D4	2	2			
			V3	82130-0074	Tube	TS	7025	1	2			
			V4	82130-0075	Tube	RCA	7199	1	2			
			V5	82130-0090	Tube	AMP	6BQ5	1	4			
			V6		Tube	AMP	6BQ5	1	-			
			V7		Tube	TS	7025	1	-			
			V8		Tube	RCA	7199	1	-			
			V9		Tube	AMP	6BQ5	1	-			
			V10		Tube	AMP	6BQ5	1	-			
			V11	82130-0059	Tube	RCA	5687	1	2			
			V12		Tube	RCA	5687	1	-			
			V13	82130-0039	Tube	RCA	12AT7	1	1			

*R.S. - RECOMMENDED AS CUSTOMER SPARES

DEPARTMENT | ISSUED BY | ISSUE DATE

LING ELECTRONICS A division of LING-TEMCO-VOUGHT INC

ENGINEERING PARTS LIST

DATE [illegible] PAGE 30 , MANUAL
REV. -- CONT'D ON - REQUISITION NO.

MODEL OR ASSY.	SERIAL NO.	SHOP ORDER	PON	QTY.	ACCOUNT NO.	M-DAY	DATE
GRN-200B							

REV.	ITEM	*R.S.	SYMBOL DESIG.	STOCK/DWG NUMBER	DESCRIPTION	MFG CODE	MANUFACTURER PART NUMBER	QTY. ASSY.	QTY. UNIT	CODE	KARDEX	PURCHASE ORDER
			XV1	82280-0039	Socket & Magnet Assembly	INDIANA STEEL	100310C	1	2			
			XV2		Socket & Magnet Assembly	INDIANA STEEL	100310C	1	-			
			XV3 - XV13	82280-0008	Socket, Tube		TS103P01	11	11			

*R.S. - RECOMMENDED AS CUSTOMER SPARES

DEPARTMENT	ISSUED BY	ISSUE DATE

LING ELECTRONICS A division of LING-TEMCO-VOUGHT, INC.

ENGINEERING PARTS LIST

MANUAL

A-10	139		43137				

				DESCRIPTION	MFR CODE	MANUFACTURER PART NUMBER	SYS. ASSY.	ASSY CODE			PURCHASE ORDER
			43949	Schematic - Amplifier Modified MO-30A			-	-			
			42275	Silkscreen - Front Panel			-	-			
			32997	Modification - Amplifier MO-30A			-	-			
			43985	Assembly - Line Amplifier Consisting of the following 5 items:			(1)	(1)			
	1		82007-0003	Power Amplifier 30W	BP	MO-30A	1	1			
	2		43950	Chassis			1	1			
	3		42274	Front Panel			1	1			
	4		82136-0003	Handle	GAXY	28-17	2	2			
	5		82305-~~0013~~ 0019	Transformer, Input 500 ohm	BP	~~T-161~~ T-605	1	1			
			82252-0103K	Potentiometer, Locking Shaft 10K 2W			1	1			
			82230-0183J	Resistor, Composition 18K 1/2W 5%			1	1			

LINO ELECTRONICS

ISSUED BY

RPM 100-250 Schematic

TS121R Schematic

MP MASTER
MA34240